CODE 9

OECD STANDARD CODE FOR THE OFFICIAL TESTING OF PROTECTIVE STRUCTURES FOR TELEHANDLERS

TABLE OF CONTENTS

1. DEFINITIONS 3
1.1 Self-propelled variable-reach all-terrain trucks: 3
1.2 Rolling Over Protective Structure (ROPS) 3
1.3 Track 3
1.4 Wheelbase 4
1.5 Determination of seat index point; Seat adjustment for test 4
1.6 Clearance zone 4
1.7 Deflection-Limiting Volume (DLV) 6
1.8 Unballasted mass 6
1.9 Permissible measurement tolerances 6
1.10 Symbols 6
2. FIELD OF APPLICATION 7
3. RULES AND DIRECTIONS 7
3.1 General regulations 7
3.2 Falling-object protective structure (FOPS) test 8
3.3 Roll-over protective structure (ROPS) test 10
3.4 Conditions for acceptance 16
3.5 Extension to other truck models 16
3.6 Labelling 18
3.7 Cold weather performance of protective structures 18
3.8 Seatbelt anchorage performance (optional) 20

SPECIMEN TEST REPORT 40

1. SPECIFICATION OF TEST TRUCK 40
2. SPECIFICATION OF PROTECTIVE STRUCTURE 41
3. TEST RESULTS 43

SPECIMEN TECHNICAL EXTENSION REPORT 47

1. SPECIFICATION OF TEST TRUCK 47
2. SPECIFICATION OF PROTECTIVE STRUCTURE 49
3. TEST RESULTS (in case of a validation test) 50

SPECIMEN ADMINISTRATIVE EXTENSION REPORT 54

ANNEX I CLEARANCE ZONE REFERRED TO THE SEAT REFERENCE POINT 55

INTRODUCTION 56
1. DEFINITIONS 56
1.5 Determination of seat reference point; seat location and adjustment for test 56
1.6 Clearance zone 57

CODE 9

OECD STANDARD CODE FOR THE OFFICIAL TESTING OF PROTECTIVE STRUCTURES FOR TELEHANDLERS

(Testing of falling-object and roll-over protective structures fitted to self-propelled variable-reach all-terrain trucks for agricultural use)

1. DEFINITIONS

1.1 Self-propelled variable-reach all-terrain trucks:

Counterbalanced lift trucks with one or more non-swivelling articulated arms (telescopic or non-telescopic), as defined in ISO Standard 5053: 1987, § 4.13.2.2.2, designed to handle loads and operate on natural, unimproved soils or in worked areas.

1.2 Rolling Over Protective Structure (ROPS)

Roll-over protective structure (safety cab or frame), hereinafter called "protective structure", means the structure on a tractor the essential purpose of which is to avoid or limit risks to the driver resulting from roll-over of the tractor during normal use.

The roll-over protective structure is characterized by the provision of space for a clearance zone large enough to protect the driver when seated either inside the envelope of the structure or within a space bounded by a series of straight lines from the outer edges of the structure to any part of the tractor that might come into contact with flat ground and that is capable of supporting the tractor in that position if the tractor overturns.

1.3 Track

1.3.1 Preliminary definition: median plane of the wheel

The median plane of the wheel is equidistant from the two planes containing the periphery of the rims at their outer edges.

1.3.2 Definition of track

The vertical plane through the wheel axis intersects its median plane along a straight line which meets the supporting surface at one point. If **A** and **B** are the two points thus defined for the wheels on the same axle of the truck, then the track width is the distance between points **A** and **B**. The track may be thus defined for both front and rear wheels. Where there are twin wheels, the track is the distance between two planes each being the median plane of the pairs of wheels.

1.3.3 Additional definition: median plane of the truck

Take the extreme positions of points **A** and **B** for the truck rear axle, which gives the maximum possible value for the track. The vertical plane at right angles to the line **AB** at its centre point is the median plane of the truck.

1.4 Wheelbase

The distance between the vertical planes passing through the two lines **AB** as defined above, one for the front wheels and one for the rear wheels.

1.5 Determination of seat index point; Seat adjustment for test

1.5.1 Seat index point (SIP)[1]

The seat index point shall be determined in accordance with ISO 5353:1995

1.5.2 Seat location and adjustment for test

1.5.2.1 where the seat position is adjustable, the seat must be adjusted to its rear uppermost position;

1.5.2.2 where the inclination of the backrest is adjustable, it must be adjusted to the mid position;

1.5.2.3 where the seat is equipped with suspension, the latter must be blocked at mid-travel, unless this is contrary to the instructions clearly laid down by the seat manufacturer;

1.5.2.4 where the position of the seat is adjustable only lengthwise and vertically, the longitudinal axis passing through the seat index point shall be parallel with the vertical longitudinal plane of the truck passing through the centre of the steering wheel and not more than 100 mm from that plane.

1.6 Clearance zone

1.6.1 Reference plane

The clearance zone is illustrated in Figures 9.14 to 9.17 and Table 9.2. The zone is defined in relation to the reference plane and the seat index point (SIP). The reference plane is a vertical plane, generally longitudinal to the truck and passing through the seat index point and the centre of the steering wheel. Normally the reference plane coincides with the longitudinal median plane of the truck. This reference plane shall be assumed to move horizontally with the seat and steering wheel during loading but to remain perpendicular to the truck or the floor of the roll-over protective structure. The clearance zone shall be defined on the basis of Sections 1.6.2 and 1.6.3.

1.6.2 Determination of the clearance zone for trucks with a non-reversible seat

The clearance zone for trucks with a non-reversible seat is defined in 1.6.2.1 to 1.6.2.10 below and is bounded by the following planes, the truck being on a horizontal surface, the seat, adjusted and located as specified in Sections 1.5.2.1 to 1.5.2.4[2], and the steering wheel, where adjustable, adjusted to the mid position for seated driving:

1.6.2.1 a horizontal plane $\mathbf{A_1\ B_1\ B_2\ A_2}$, (810 + a_v) mm above the seat index point (SIP) with line B_1B_2 located (a_h-10) mm behind the SIP;

[1] For extension tests to test reports that originally used seat reference point (SRP), the required measurements shall be made with reference to SRP instead of SIP and the use of SRP shall be clearly indicated (see Annex 1).

[2] Users are reminded that the seat index point is determined according to ISO 5353 and is a fixed point with respect to the tractor that does not move as the seat is adjusted away from the midposition.

1.6.2.2 an inclined plane $\mathbf{G_1\ G_2\ I_2\ I_1}$, perpendicular to the reference plane, including both a point 150 mm behind line B_1B_2 and the rearmost point of the seat backrest;

1.6.2.3 a cylindrical surface $\mathbf{A_1\ A_2\ I_2\ I_1}$ perpendicular to the reference plane, having a radius of 120 mm, tangential to the planes defined in 1.6.2.1 and 1.6.2.2 above;

1.6.2.4 a cylindrical surface $\mathbf{B_1\ C_1\ C_2\ B_2}$, perpendicular to the reference plane, having a radius of 900 mm extending forward for 400 mm and tangential to the plane defined in 1.6.2.1 above along line B_1B_2;

1.6.2.5 an inclined plane $\mathbf{C_1\ D_1\ D_2\ C_2}$, perpendicular to the reference plane, joining the surface defined in 1.6.2.4 above and passing 40 mm from the forward external edge of the steering wheel. In the case of a high steering wheel position, this plane extends forward from line B_1B_2 tangentially to the surface defined in 1.6.2.4 above;

1.6.2.6 a vertical plane $\mathbf{D_1\ E_1\ E_2\ D_2}$ perpendicular to the reference plane 40 mm forward of the external edge of the steering wheel;

1.6.2.7 a horizontal plane $\mathbf{E_1\ F_1\ F_2\ E_2}$ passing through a point (90-a_v) mm below the seat index point (SIP);

1.6.2.8 a surface $\mathbf{G_1\ F_1\ F_2\ G_2}$, if necessary curved from the bottom limit of the plane defined in 1.6.2.2 above to the horizontal plane defined in 1.6.2.7 above, perpendicular to the reference plane, and in contact with the seat backrest throughout its length;

1.6.2.9 vertical planes $\mathbf{J_1\ E_1\ F_1\ G_1\ H_1}$ and $\mathbf{J_2\ E_2\ F_2\ G_2\ H_2}$. These vertical planes shall extend upwards from plane $\mathbf{E_1\ F_1\ F_2\ E_2}$ for 300 mm; the distances $\mathbf{E_1\ E_0}$ and $\mathbf{E_2\ E_0}$ shall be 250 mm;

1.6.2.10 parallel planes $\mathbf{A_1\ B_1\ C_1\ D_1\ J_1\ H_1\ I_1}$ and $\mathbf{A_2\ B_2\ C_2\ D_2\ J_2\ H_2\ I_2}$ inclined so that the plane upper edge of the plane on the side on which the force is applied is at least 100 mm from the vertical reference plane.

1.6.3 Determination of the clearance zone for trucks with a reversible driver's position

For trucks with a reversible driver’s position (reversible seat and steering wheel), the zone of clearance is the envelope of the two clearance zones defined by the two different positions of the steering wheel and the seat.

1.6.4 Optional seats

1.6.4.1 In case of trucks that could be fitted with optional seats, the envelope comprising the seat index points of all options offered shall be used during the tests. The protective structure shall not enter the larger clearance zone which takes account of these different seat index points.

1.6.4.2 In the case where a new seat option is offered after the test has been performed, a determination shall be made to see whether the clearance zone around the new SIP falls within the envelope previously established. If it does not, a new test must be performed.

1.6.4.3 Optional seat does not include a seat for a person in addition to the driver and from where the tractor cannot be controlled. The SIP shall not be determined because the definition of the clearance zone is in relation to the driver seat.

1.7 Deflection-Limiting Volume (DLV)

The Deflection-Limiting Volume shall comply with ISO 3164:1995.

1.7.1 Trucks with a reversible driver's position

For trucks with a reversible driver's position (reversible seat and steering wheel), the DLV is the envelope of the two DLV defined by the two different positions of the steering wheel and the seat.

1.7.2 Optional seats

1.7.2.1 In the case of trucks that could be fitted with optional seats, the envelope comprising the SIPs of all the options offered shall be used during the tests. The protective structure shall not enter the larger DLVs which takes into account these different SIPs.

1.7.2.2 In the case where a new seat option is offered after the test has been performed, a determination shall be made to see whether the clearance zone around the new SIP falls within the envelope previously established. If it does not, a new test must be performed.

1.8 Unballasted mass

The mass of the truck without ballasting devices and without liquid ballast in the tyres. The truck shall be in running order with tanks, circuits and radiator full, protective structure with cladding and any track equipment or additional front wheel drive components required for normal use. The operator is not included.

1.9 Permissible measurement tolerances[3]

Time	± 0.1 s
Distance	± 0.5 mm
Force	± 0.1 % (of the sensor full scale)
Mass	± 0.2 % (of the sensor full scale)
Angle	± 0.1°

1.10 Symbols

$\mathbf{a_h}$	(mm)	Half of the horizontal seat adjustment
$\mathbf{a_v}$	(mm)	Half of the vertical seat adjustment
D	(mm)	Deflection of the protective structure at the point of and in line with the load application

[3] These "new" tolerance values should be respected excluding two particular situations:

- When performing tests outside OECD Station premises, and therefore the test operators are presumably using instrumentation set different from those normally used;
- When non electronic" (i.e. mechanical or manual) measuring instruments are used. In this case, the "old" tolerance values could be considered: Time ±0.2 s, Distance ±0.5 %, Force ±1.0 %, Mass ±0.5 %.

D'	(mm)	Deflection of the protective structure for the calculated energy required
$\mathbf{E_{IS}}$	(J)	Energy input to be absorbed during side loading
$\mathbf{E_{IL1}}$	(J)	Energy input to be absorbed during longitudinal loading
$\mathbf{E_{IL2}}$	(J)	Energy input to be absorbed in case of a second longitudinal loading
F	(N)	Static load force
$\mathbf{F_{max}}$	(N)	Maximum static load force occurring during loading, with the exception of the overload
F'	(N)	Force for the calculated energy required
M	(kg)	Mass used for calculating energy and crushing forces

2. FIELD OF APPLICATION

2.1 This OECD Standard Code is applicable to self-propelled variable-reach all-terrain trucks for agricultural use.

2.2 These are trucks which meet the definitions in 1.1 and are designed to conduct the following operations, for agricultural and forestry purposes:

- to pull trailers
- to carry, pull or propel agricultural and forestry tools or machinery and, where necessary, supply power to operate them with the truck in motion or stationary.

3. RULES AND DIRECTIONS

3.1 General regulations

3.1.1 The protective structure may be manufactured either by the truck manufacturer or by an independent firm. In either case a test is only valid for the model of truck on which it is carried out. The protective structure must be retested for each model of truck to which it is to be fitted. However, testing stations may certify that the strength tests are also valid for truck models derived from the original model by modifications to the engine, transmission and steering and front suspension (*see below 3.5: Extension to other truck models*). On the other hand, more than one protective structure may be tested for any one model of truck.

3.1.2 The protective structure submitted for tests must be supplied already attached in the normal manner to the truck or truck chassis on which it is used. The truck chassis shall be complete including attaching brackets and other parts of the truck that may be affected by impacts and loads imposed on the protective structure.

3.1.3 A protective structure may be designed solely to protect the driver in the event of an object falling or the truck overturning. Onto this structure it may be possible to fit weather protection for the driver, of a more or less temporary nature. The driver will usually remove this in warm weather. There are protective structures however, in which the cladding is permanent and warm weather ventilation provided by windows or flaps. As the cladding may add to the strength of the structure and if removable may well be absent when an accident occurs, all parts that can be so taken away by the driver will be removed for the purpose of the test. Doors, roof hatch and windows that can be opened shall be either removed or fixed in the open position for the test, so that they do not add to the strength of the protective structure. It shall be

noted whether, in this position, they would create a hazard for the driver in the event of an object falling or the truck overturning.

Throughout the remainder of these rules, reference will only be made to testing the protective structure. It must be understood that this includes cladding of a permanent nature.

A description of any temporary cladding supplied is to be included in the specifications. All glass or similar brittle material shall be removed prior to the test**.** Truck and protective structure components which might sustain needless damage during the test and which do not affect the strength of the protective structure or its dimensions may be removed prior to the test if the manufacturer wishes. No repairs or adjustment may be carried out during the test.

3.1.4 Any component of the truck contributing to the strength of the protective structure such as mudguards, which has been reinforced by the manufacturer, should be described and its measurements given in the test report.

3.1.5 The tests shall be carried out without the boom of the truck.

3.2 Falling-object protective structure (FOPS) test

3.2.1 Apparatus

3.2.1.1 Drop test object

Standard laboratory drop test object, made of steel as shown in Figure 9.1.

An optional drop test object is a sphere or ball with a maximum diameter of 400 mm.

3.2.1.2 Means of raising the standard object to the required height.

3.2.1.3 Means of releasing the standard object so that it drops without restraint.

3.2.1.4 Surface of such firmness that it is not penetrated by the truck or test bed under the loading of the drop test.

3.2.1.5 Means of determining whether the FOPS enters the DLV during the drop test. This may be either of the following:

- a DLV, placed upright, made of a material which will indicate any penetration by the FOPS; grease may be put on the lower surface of the FOPS cover to indicate such penetration;

- a dynamic instrumentation system of sufficient frequency response to indicate the relevant deflection with respect to the DLV.

3.2.2 Test conditions

3.2.2.1 DLV requirements:

The DLV and its location shall be in accordance with ISO 3164:1995. The DLV shall be fixed firmly to the same part of the truck as the operator’s seat and shall remain there during the entire formal test period.

3.2.2.2 Measurement accuracy

The measurement accuracy of the deflection of the FOPS shall be ± 5% of the maximum deflection measured.

3.2.2.3 Truck or test bed condition

3.2.2.3.1 The FOPS to be evaluated shall be attached to the truck structure as it would be attached in actual truck use. A complete truck is not required, however, the portion on which the FOPS is mounted shall be identical to the actual structure, and the vertical stiffness of a test bed shall not be less than that of an actual truck as described in 3.2.2.3.2

3.2.2.3.2 If the FOPS is mounted on a truck, all suspension systems, including pneumatic tyres, shall be set at operating levels. Variable suspensions shall be in the maximum stiffness range.

3.2.3 Procedure

The drop test procedure shall consist of the following operations, in the order listed.

3.2.3.1 Place the standard laboratory drop test object (3.2.1.1) on top of the FOPS with the small end down, at the location designated in 3.2.3.2.

3.2.3.2 The small end of the object shall be entirely within the vertical projection of the DLV, in that volume's upright position, on the FOPS top. It is intended that the drop location includes at least a portion of the vertical projection of the top plane area of the DLV.

- Case 1: Where major, upper, horizontal members of the FOPS do not enter the vertical projection of the DLV on the FOPS top.

- The drop test object shall be placed such that it is as close as possible to the centre of gravity of the upper FOPS structure (see Figure 9.2).

- Case 2: Where major, upper, horizontal members of the FOPS do enter the vertical projection of the DLV on the FOPS top.

When the covering material of all the surface areas above the DLV is of uniform thickness, the centre of the drop test object shall be in the surface of greatest area. This area is the vertical projected area of the DLV without major, upper, horizontal members. The centre of the drop test object shall be at that point, within the surface of greatest area, which has the least possible distance from the centroid of the FOPS top (see Figure 9.2).

Where other materials or a different thickness are used in different areas above the DLV, each area in turn shall be subjected to a drop test. If design features such as cutouts for windows or equipment, or variations in cover material or thickness indicate a more vulnerable location could obviously be selected within the vertical projection of the DLV, the drop location should be adjusted to that location. In addition, if cut outs in the FOPS cover are intended to be filled with devices or equipment to provide adequate protection, those devices or equipment shall be in place during the drop test.

3.2.3.3 Raise the drop test object vertically to a height above the position indicated in 3.2.3.1 and 3.2.3.2 to develop an energy of 5800 J or 11 600 J. Two energy levels are given. The energy level shall be chosen by the manufacturer according to the intended use of the truck.

3.2.3.4 Release the drop object so that it falls without restraint onto the FOPS.

3.2.3.5 As it is unlikely that the free fall will result in the drop test object hitting at the location as specified in 3.2.3.1 and 3.2.3.2, the following limits are placed on deviations.

3.2.3.6 The initial impact of the small end of the drop test object shall be entirely within a circle of 200mm radius (the centre of this circle is to coincide with the vertical centre line of the drop test object as positioned according to 3.2.3.1 and 3.2.3.2).

3.2.3.7 The first contact between the test object and the FOPS shall only be along the small end or the radius contiguous to that end (see Figure 9.1).

3.2.3.8 There is no limitation on location or attitude of subsequent impacts due to rebound.

3.2.4 Performance requirements

The DLV shall not be entered by any part of the protective structure under the first or subsequent impact of the drop test object. Should the drop test object penetrate the FOPS, it shall be considered to have failed that test.

The FOPS shall completely cover and overlap the vertical projection of the DLV.

Should the same structure be used for both evaluations, the drop test procedure shall precede the loading of the structure; the removal of impact dents or replacement of the FOPS cover is permitted.

3.3 Roll-over protective structure (ROPS) test

3.3.1 Apparatus

To verify that the clearance zone has not been entered during the test, a device shall be used as described in point 1.5, Figures 9.14 to 9.16 and Table 9.2.

3.3.1.1 Horizontal loading tests (Figures 9.3 to 9.8)

The following shall be used in horizontal loading tests:

3.3.1.1.1 material, equipment and means of attachment to ensure that the truck chassis is firmly fixed to the ground and supported independently of the tyres;

3.3.1.1.2 device for applying a horizontal force to the protective structure; provision shall be made so that the load can be uniformly distributed and normal to the direction of loading:

3.3.1.1.2.1 a beam of length not less than 250 mm nor more than 700 mm in exact multiples of 50 mm between these lengths shall be used. The beam shall have a vertical dimension of 150 mm;

3.3.1.1.2.2 the edges of the beam in contact with the protective structure shall be curved with a maximum radius of 50 mm;

3.3.1.1.2.3 universal joints or the equivalent shall be incorporated to ensure that the loading device does not constrain the protective structure in rotation or translation in any direction other than the direction of loading;

3.3.1.1.2.4 where the straight line defined by the appropriate beam on the protective structure is not normal to the direction of application of load, the space shall be packed so as to distribute the load over the full length;

3.3.1.1.3 equipment for measuring force and deflection in the load direction, relative to the truck chassis. To ensure accuracy, measurements shall be taken as continuous readings. The measuring devices shall be located so as to record the force and deflection at the point of and along the line of loading.

3.3.1.2 Crushing tests (Figures 9.9 to 9.13)

The following shall be used in crushing tests:

3.3.1.2.1 material, equipment and means of attachment to ensure that the truck chassis is firmly fixed to the ground and supported independently of the tyres;

3.3.1.2.2 device for applying a downward force to the protective structure, including a stiff beam with a width of 250 mm;

3.3.1.2.3 equipment for measuring the total vertical force applied.

3.3.2 Test conditions

3.3.2.1 The protective structure shall conform to production specifications and shall be fitted to the appropriate truck model chassis in accordance with the manufacturer's declared method of attachment.

3.3.2.2 The assembly shall be secured to the bedplate so that the members connecting the assembly and the bedplate do not deflect significantly in relation to the protective structure under load. The assembly shall not receive any support under load other than that due to the initial attachment.

3.3.2.3 An adjustable track width setting for the wheels, if present, shall be chosen such that no interference exists with the protective structure during the tests.

3.3.2.4 The protective structure shall be instrumented with the necessary equipment to obtain the required force-deflection data.

3.3.2.5 All tests shall be performed on the same protective structure. No repairs or straightening of any members shall be carried out between any parts of the test.

3.3.2.6 On completion of all tests, permanent deflections of the protective structure shall be measured and recorded.

3.3.3 Sequence of tests

Tests shall be conducted in the following sequence:

3.3.3.1 Longitudinal loading

For a wheeled truck with at least 50 per cent of its mass on the rear axle and for track laying trucks, the longitudinal loading shall be applied from the rear. For other trucks the longitudinal loading shall be applied from the front.

3.3.3.2 First crushing test

The first crushing test shall be applied at the same end of the protective structure as the longitudinal loading.

3.3.3.3 Loading from the side

In the case of an offset seat or non-symmetrical strength of the protective structure, the side loading shall be on the side most likely to lead to infringement of the clearance zone.

3.3.3.4 Second crushing test

The second crushing test shall be applied at the end of the protective structure opposite from that receiving the first longitudinal loading. In the case of two-post designs, the second crush may be at the same point as the first crush.

3.3.3.5 Second longitudinal loading

3.3.3.5.1 A second longitudinal loading shall be applied to trucks fitted with a tiltable (e.g. non-two post) protective structure if the structure is designed to tilt for service, unless the tilt mechanism is independent from the structural integrity of the roll-over protective structure.

3.3.3.5.2 For folding protective structures, if the first longitudinal loading was applied in the folding direction then a second longitudinal loading is not required.

3.3.3.6 Horizontal loading tests from the rear, front and side

3.3.3.6.1 General provisions

3.3.3.6.1.1 The load applied to the protective structure shall be distributed uniformly by means of a stiff beam, normal to the direction of load application (see 3.3.1.1.2). The stiff beam may be equipped with a means of preventing its sideways displacement. The rate of load application shall be such that it can be considered static. As the load is applied, force and deflection shall be recorded as a continuous record to ensure accuracy. Once the initial application has commenced, the load shall not be reduced until the test has been completed. The direction of the applied force shall be within the following limits:

- at start of test (no load): ± 2°;
- during test (under load): 10° above and 20° below the horizontal.
- The rate of load application shall be considered static if the rate of deflection under loading is not greater than 5 mm/s.

3.3.3.6.1.2 If no structural cross member exists at the point of load application, a substitute test beam which does not add strength will be utilised.

3.3.3.6.2 Longitudinal loading (Figures 9.3 to 9.5)

The load shall be applied horizontally and parallel to the median plane of the truck. If the load is applied from the rear (section 3.3.3.1), the longitudinal load and the lateral load shall be applied on different sides of the vertical reference plane. If the longitudinal load is applied from the front, it shall be on the same side as the side load.

The load shall be applied to the uppermost transverse structural member of the protective structure (i.e. that part which would be likely to strike the ground first in an overturn).

The point of application of the load shall be located at one sixth of the width of the top of the protective structure inwards from the outside corner. The width of the protective structure shall be taken as the distance between two lines parallel to the median plane of the truck touching the outside extremities of the protective structure in the horizontal plane touching the top of the uppermost transverse structural members.

The length of the load distribution device (see 3.3.1.1.2) shall be not less than one third of the width of the protective structure and not more than 49 mm greater than this minimum.

The longitudinal loading shall be stopped when:

3.3.3.6.2.1 the energy absorbed by the protective structure is equal to or greater than the required energy input**,** $\mathbf{E_{IL1}}$ where:

$$\mathbf{E_{IL1} = 1.4\ M}$$

3.3.3.6.2.2 the protective structure infringes on the clearance zone or leaves the clearance zone unprotected (performance requirement in 3.3.4 below).

3.3.3.6.3 Side loading (Figures 9.6 to 9.8)

The side loading shall be applied horizontally at 90° to the median plane of the truck. It shall be applied to the upper extremity of the protective structure at a point (160- a_h) forward of the seat index point.

For trucks with a reversible driver's position (reversible seat and steering wheel), it shall be applied to the upper extremity of the protective structure at the mid-point between the two seat index points.

If it is certain that any particular part of the protective structure will touch ground first when the truck overturns sideways, the loading shall be applied at that point, provided that this permits uniform distribution of the load as specified in 3.3.3.6.1.1. In the case of a two-post protective structure, side loading shall be applied at the structural member uppermost on the side, regardless of the seat index position.

The load distribution beam shall be as long as practicable subject to a maximum of 700 mm.

The side loading shall be stopped when:

3.3.3.6.3.1 The energy absorbed by the protective structure is equal to or greater than the required energy, $\mathbf{E_{IS}}$ **,** where:

$$\mathbf{E_{IS} = 1.75\ M}$$

3.3.3.6.3.2 The protective structure infringes on the clearance zone or leaves the clearance zone unprotected (performance requirement in 3.3.4 below).

3.3.3.7 Crushing tests (Figures 9.9 to 9.13)

3.3.3.7.1 Crushing at the rear (Figures 9.9 to 9.11)

3.3.3.7.1.1 The crushing beam shall be positioned across the rear uppermost structural members so that the resultant of the crushing forces is located in the vertical reference plane. The crushing force **F** shall be applied where:

$$\mathbf{F = 20\ M}$$

This force shall be maintained for five seconds after cessation of any visually detectable movement of the protective structure.

3.3.3.7.1.2 Where the rear part of the protective structure roof will not sustain the full crushing force, the force shall be applied until the roof is deflected to coincide with the plane joining the upper part of the protective structure with that part of the rear of the truck capable of supporting the truck when overturned. The force shall then be removed and the crushing beam repositioned over that part of the protective structure that would support the truck when completely overturned. The crushing force **F = 20 M** shall then be applied.

3.3.3.7.2 Crushing at the front (Figures 9.9 to 9.11)

3.3.3.7.2.1 The crushing beam shall be positioned across the front uppermost structural members so that the resultant of the crushing forces is located in the vertical reference plane. The crushing force **F** shall be applied where:

$$\mathbf{F = 20\ M.}$$

This force shall be maintained for 5 seconds after cessation of any visually detectable movement of the protective structure.

3.3.3.7.2.2 Where the front part of the roof of the protective structure will not sustain the full crushing force (Figures 9.12 to 9.13), the force shall be applied until the roof is deflected to coincide with the plane joining the upper part of the protective structure with that part of the front of the truck capable of supporting the truck when overturned. The force shall then be removed and the crushing beam repositioned over that part of the protective structure that would support the truck when completely overturned. The crushing force **F = 20 M** shall then be applied.

3.3.3.8 Second longitudinal loading test (Figures 9.3 to 9.5)

The load shall be applied in the opposite direction to and at the corner farthest from the point of application of the first longitudinal load.

The longitudinal loading shall be stopped when:

3.3.3.8.1 The energy absorbed by the protective structure is equal to or greater than the required energy, $\mathbf{E_{IL2}}$**,** where:

$$\mathbf{E_{IL2} = 0.5\ M}$$

3.3.3.8.2 The protective structure infringes on the clearance zone or leaves the clearance zone unprotected (performance requirement in 3.3.4 below).

3.3.4 Performance requirements:

The protective structure shall fulfil the following conditions during and after completion of the tests:

3.3.4.1 no part shall enter the clearance zone during any part of the tests. No part may strike the seat during the tests. Furthermore, the clearance zone shall not be outside the protection of the protective structure. For this purpose, it shall be considered to be outside the protection of the structure if any part of it would come in contact with flat ground if the truck overturned towards the direction from which the test load is applied. In order to estimate this, the tyres and track width setting shall be the smallest standard fitting specified by the manufacturer;

3.3.4.2 for the articulated trucks, the median planes of the two parts shall be assumed to be in line;

3.3.4.3 after the final crushing test the permanent deflection of the protective structure shall be recorded. For this purpose, before the start of the test, the position of the main protective structure members in relation to the seat index point shall be recorded. Then any displacement of the members resulting from the loading tests and any change of the height of the front and back members of the roof of the protective structure shall be recorded;

3.3.4.4 at the point where the required energy absorption is met in each of the specified horizontal loading tests the force shall exceed 0.8 F_{max};

3.3.4.5 an overload test shall be required if the applied force decreases by more than 3 per cent over the last 5 per cent of the deflection attained when the energy required is absorbed by the structure (Figures 9.18 to 9.20). Description of the overload test:

3.3.4.5.1 an overload test shall consist of continuing the horizontal loading in increments of 5 per cent of the original required energy, up to a maximum of 20 per cent additional energy;

3.3.4.5.2 the overload test shall be successfully completed if after the absorption of 5, 10 or 15 per cent additional energy the force drops by less than 3 per cent for each 5 per cent increment whilst remaining greater than 0.8 F_{max} or if, after the absorption of 20 per cent additional energy the force is greater than 0.8 F_{max};

3.3.4.5.3 additional cracks or tears or entry into or lack of protection of the clearance zone, due to elastic deformation, are permitted during the overload test. After removing the load, however, the protective structure shall not infringe on the clearance zone, which shall be completely protected;

3.3.4.6 the required force must be sustained in both crushing tests;

3.3.4.7 there shall be no protruding member or component which would be likely to cause serious injury during an overturning accident or which, through the deformation occurring, might trap the operator, for example by the leg or foot;

3.3.4.8 there shall be no other components presenting a serious hazard to the operator.

3.4 Conditions for acceptance

For the structure to be accepted, it shall meet the performance requirements set out in 3.2.4 and 3.3.4.

3.5 Extension to other truck models

3.5.1 Administrative extension

If there are changes in the make, denomination or marketing features of the truck or protective structure tested or listed in the original test report, the testing station that has carried out the original test can issue an ‘’administrative extension report’’. This extension report shall contain a reference to the original test report.

3.5.2 Technical extension

When technical modifications occur on the truck, the protective structure or the method of attachment of the protective structure to the truck, the testing station that has carried out the original test can issue a “technical extension report” in the following cases:

3.5.2.1 Extension of the structural test results to other models of truck

The impact and crushing tests need not be carried out on each model of truck, provided that the protective structure and truck comply with the conditions referred to hereunder 3.5.2.1.1 to 3.5.2.1.5.

3.5.2.1.1 The structure shall be identical to the one tested;

3.5.2.1.2 The required energy shall not exceed the energy calculated for the original test by more than 5 per cent. The 5 per cent limit shall also apply to extensions in the case of substituting tracks for wheels on the same truck;

3.5.2.1.3 The method of attachment and the truck components to which the attachment is made shall be identical;

3.5.2.1.4 Any components such as mudguards and bonnet that may provide support for the protective structure shall be identical;

3.5.2.1.5 The position and critical dimensions of the seat in the protective structure and the relative position of the protective structure on the truck shall be such that the clearance zone would have remained within the protection of the deflected structure throughout all tests (this shall be checked by using the same reference of clearance zone as in the original test report, respectively Seat Reference Point [SRP] or Seat Index Point [SIP]).

3.5.2.2 Extension of the structural test results to modified models of the protective structure

This procedure has to be followed when the provisions of paragraph 3.5.2.1 are not fulfilled, it may not be used when the method of attachment of the protective structure to the truck does not remain of the same principle (e.g. rubber supports replaced by a suspension device):

3.5.2.2.1 Modifications having no impact on the results of the initial test (e.g. weld attachment of the mounting plate of an accessory in a non-critical location on the structure), addition of seats with different SIP location in the protective structure (subject to checking that the new clearance zone(s) remain(s) within the protection of the deflected structure throughout all tests).

3.5.2.2.2 Modifications having a possible impact on the results of the original test without calling into question the acceptability of the protective structure (e.g. modification of a structural component, modification of the method of attachment of the protective structure to the truck). A validation test can be carried out and the test results will be drafted in the extension report.

The following limits for this type extension are fixed:

3.5.2.2.2.1 no more than 5 extension may be accepted without a validation test;

3.5.2.2.2.2 the results of the validation test will be accepted for extension if all the acceptance conditions of the Code are fulfilled and if the force measured when the required energy level has been reached in the various horizontal load tests does not deviate from the force measured when the required energy has been reached in the original test by more than ± 7% and the deflection measured[4] when the required energy level has been reached in the various horizontal

[4] Permanent + elastic deflection measured at the point when the required energy level is obtained.

load tests does not deviate from the deflection measured when the required energy has been reached in the original test report by more than ± 7%.

3.5.2.2.2.3 more than one protective structure modifications may be included in a single extension report if the represent different options of the same protective structure, but only one validation test can be accepted in a single extension report. The options not tested shall be described in a specific section of the extension report.

3.5.2.2.3 Increase of the reference mass declared by the manufacturer for a protective structure already tested. If the manufacturer wants to keep the same approval number it is possible to issue an extension report after having carried out a validation test (the limits of ± 7% specified in 3.5.2.2.2.2 are not applicable in such a case).

3.6 Labelling

3.6.1 OECD labelling is optional. If it is utilised, it shall contain at least the following information:

3.6.1.1 OECD reference;

3.6.1.2 OECD approval number.

3.6.2 The label shall be durable and permanently attached to the protective structure such that it can be easily read and it shall be protected from environmental damage.

3.7 Cold weather performance of protective structures

3.7.1 If the protective structure is claimed to have properties resistant to cold weather embrittlement, the manufacturer shall include these details in the report.

3.7.2 The following requirements and procedures are intended to provide strength and resistance to brittle fracture at reduced temperatures. It is suggested that the following minimum material requirements shall be met in order to judge the protective structure's suitability at reduced operating temperatures in countries requiring this additional operating protection:

3.7.2.1 Bolts and nuts used to attach the protective structure to the truck and used to connect structural parts of the protective structure shall exhibit suitable controlled reduced temperature toughness properties.

3.7.2.2 All welding electrodes used in the fabrication of structural members and mounts shall be compatible with the protective structure material as given in 3.7.2.3 below.

3.7.2.3 Steel materials for structural members of the protective structure shall be of controlled toughness material exhibiting minimum Charpy V-Notch impact energy requirements as shown in Table 9.1. Steel grade and quality shall be specified in accordance with ISO 630:1995; Amd1:2003.

Steel with an as-rolled thickness less than 2.5 mm and with a carbon content less than 0.2 per cent is considered to meet this requirement.

Structural members of the protective structure made from materials other than steel shall have equivalent low temperature impact resistance.

3.7.2.4 When testing the Charpy V-Notch impact energy requirements, the specimen size shall be no less than the largest of the sizes stated in Table 9.1 that the material will permit.

3.7.2.5 The Charpy V-Notch tests shall be made in accordance with the procedure in ASTM A 370-1979, except for specimen sizes that shall be in accordance with the dimensions given in Table 9.1.

3.7.2.6 Alternatives to this procedure are the use of killed or semi-killed steel for which an adequate specification shall be provided. Steel grade and quality shall be specified in accordance with ISO 630:1995; Amd1:2003.

3.7.2.7 Specimens are to be longitudinal and taken from flat stock, tubular or structural sections before being formed or welded for use in the protective structure. Specimens from tubular or structural sections are to be taken from the middle of the side of the greatest dimension and shall not include welds.

Specimen size	**Energy at**	**Energy at**
	- 30 °C	**- 20 °C**
mm	**J**	**J[b)]**
10 x 10[a)]	11	27.5
10 x 9	10	25
10 x 8	9.5	24
10 x 7,5[a)]	9.5	24
10 x 7	9	22.5
10 x 6.7	8.5	21
10 x 6	8	20
10 x 5[a)]	7.5	19
10 x 4	7	17.5
10 x 3.5	6	15
10 x 3	6	15
10 x 2.5[a)]	5.5	14

Table 9.1

Minimum Charpy V-notch impact energies

[a)] Indicates preferred size. Specimen size shall be no less than largest preferred size that the material permits.

[b)] The energy requirement at – 20 °C is 2.5 times the value specified for – 30 °C. Other factors affect impact energy strength, i.e. direction of rolling, yield strength, grain orientation and welding. These factors shall be considered when selecting and using a steel.

3.8 Seatbelt anchorage performance (optional)

3.8.1 Scope

Seat belts are one of the operator restraint systems used for securing the driver in motor vehicles.

This recommended procedure provides minimum performance and tests requirements for anchorage for agricultural and forestry trucks.

It applies to the anchorage of pelvic restraint systems.

3.8.2 Explanation of terms used in the performance testing

3.8.2.1 The *seat belt assembly* is any strap or belt device fastened across the lap or pelvic girdle area designed to secure a person in a truck.

3.8.2.2 The *extension belt* is intended as any strap, belt, or similar device that aids in the transfer of seat belt loads.

3.8.2.3 The *anchorage* is intended as the point where the seat belt assembly is mechanically attached to the seat system or truck.

3.8.2.4 The *seat mounting* is intended as all intermediary fittings (such as slides, etc.) used to secure the seat to the appropriate part of the truck.

3.8.2.5 The *Operator Restraint System* is intended as the total system composed of seat belt assembly, seat system, anchorages and extension which transfers the seat belt load to the truck.

3.8.2.6 *Applicable Seat Components* comprise all components of the seat whose mass could contribute to loading of the seat mounting (to the vehicle structure) during a roll-over event.

3.8.3 Test procedure

The procedure is applicable to a seat belt anchorage system provided for a driver or a person in addition to the driver carried by the tractor.

Only static tests for anchorages are given in this procedure.

If, for a given protective structure, a manufacturer provides more than one seat with identical components which transfer the load from the seatbelt anchorage to the seat mounting on the ROPS floor or tractor chassis, the Testing Station is authorized to test only one configuration, corresponding to the heaviest seat *(see also below).*

The seat shall be in position during the tests and fixed to the mounting point on the truck using all intermediary fittings (such as suspension, slides, etc.) specified for the complete truck. No additional non-standard fittings contributing to the strength of the construction may be used.

The worst case loading scenario for seat belt anchorage performance testing should be identified with consideration to the following points:-

- If the masses of alternative seats are comparable, those featuring seat belt anchorages which transfer loading through the seat structure *(e.g. via the suspension system and/or adjustment slides)*, will be required to withstand much higher test loading. They are therefore likely to represent the worst case;

- If the applied loading will pass through the seat mountings to the vehicle chassis, the seat should be adjusted longitudinally to achieve the minimum amount of overlap of the mounting slides / rails. This will usually be when the seat is in the fully-rearward position but, if certain vehicle installations limit seat rearward travel, the fully-forward seat position may provide the worst case loading position. Observation of the amount of seat movement and mounting slide / rail overlap is required.

The anchorages shall be capable of withstanding the loads applied to the seat belt system using a device as shown in Figure 9.21. The seat belt anchorages shall be capable of these test loads applied with the seat adjusted in the worst position of the longitudinal adjustment to ensure that the test condition is met. The test loads shall be applied with the seat in the mid-position of the longitudinal adjustment if a worst position among the possible seat adjustments is not recognised by the testing station. For a suspended seat, the seat shall be set to the midpoint of the suspension travel, unless this is contradictory to a clearly stated instruction by the seat manufacturer. Where special instructions exist for the seat setting, these shall be observed and specified in the report.

After the load is applied to the seat system, the load application device shall not be repositioned to compensate for any changes that may occur to the load application angle.

3.8.3.1 Forward loading

A tensile force shall be applied in a forward and upward direction at an angle of 45º ± 2º to the horizontal, as shown in Figure 9.22. The anchorages shall be capable of withstanding a force of 4 450 N. In the event that the force applied to the seat belt assembly is transferred to the vehicle chassis by means of the seat, the seat mounting shall be capable of withstanding this force plus an additional force equal to four times the force of gravity on the mass of all applicable seat components, applied 45º ± 2º to the horizontal in a forward and upward direction, as shown in Figure 9.22.

3.8.3.2 Rearward loading

A tensile force shall be applied in a rearward and upward direction at an angle of 45º ± 2º to the horizontal, as shown in Figure 9.23. The anchorages shall be capable of withstanding a force of 2 225 N. In the event that the force applied to the seat belt assembly is transferred to the vehicle chassis by means of the seat, the seat mounting shall be capable of withstanding this force plus an additional force equal to two times the force of gravity on the mass of all applicable seat components, applied 45º ± 2º to the horizontal in a rearward and upward direction, as shown in Figure 9.23.

Both tensile forces shall be equally divided between the anchorages.

3.8.3.3 Seatbelt buckle release force (if required by the manufacturer)

The seat belt buckle shall open with a maximum force of 140 N following the load applications. This requirement is fulfilled for seat belt assemblies that satisfy the requirements of UN-ECE R-16 or Directive 77/541/EEC as last amended.

3.8.4. Test result

Condition of acceptance

Permanent deformation of any system component and anchorage area is acceptable under the action of the forces specified in 3.8.3.1 and 3.8.3.2. However, there shall be no failure allowing release of the seat belt system, seat assembly, or the seat adjustment locking mechanism.

The seat adjuster or locking device need not be operable after application of the test load.

The results of a test performed on an identical "operator restraint system" may be included in more than one test report provided that this system is fitted exactly in the same conditions.

The results of a test performed after the approval of the test report of the protective structure shall be drafted in a technical extension report.

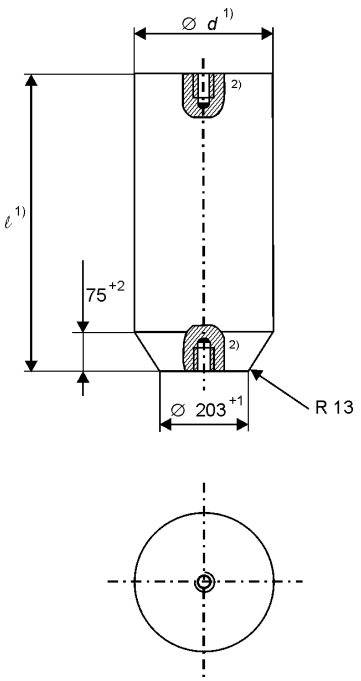

1) Dimensions d and ℓ are optional, depending on the mass of the test object required to match the height of drop that will provide the energy specified in 3.2.3.3

For example, for a drop test object mass of 227 kg:

d = 255 to 260 mm

ℓ = 583 to 585 mm

2) May be drilled and tapped for a lifting eye.

Figure 9.1

Standard laboratory drop test object

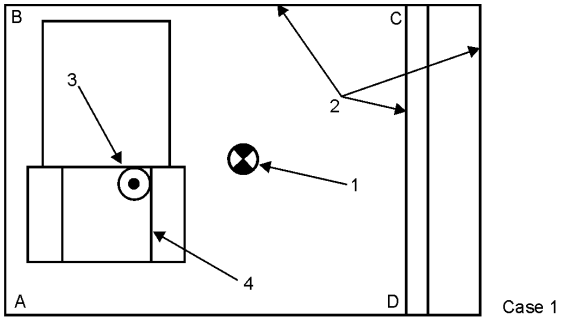

Key
1. Centroid of A-B-C-D
2. Major members
3. Drop object
4. DLV top plane

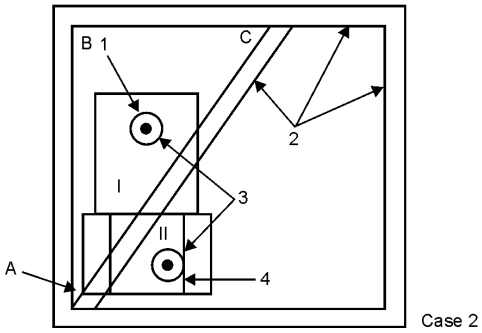

Key
1. Centroid of A-B-C
2. Major members
3. Drop object
4. DLV top plane

Note: I has a greater area than II

Figure 9.2

Drop test impact points

Dimensions in mm

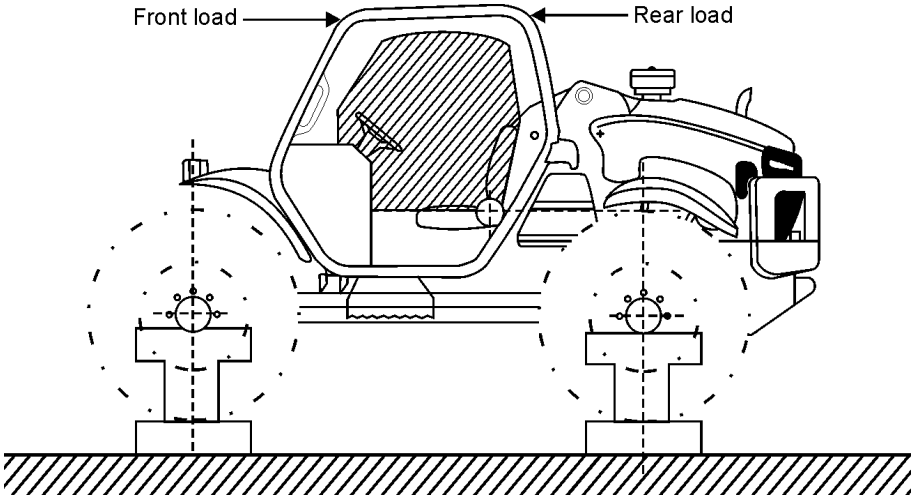

Figure 9.3

Protective cab

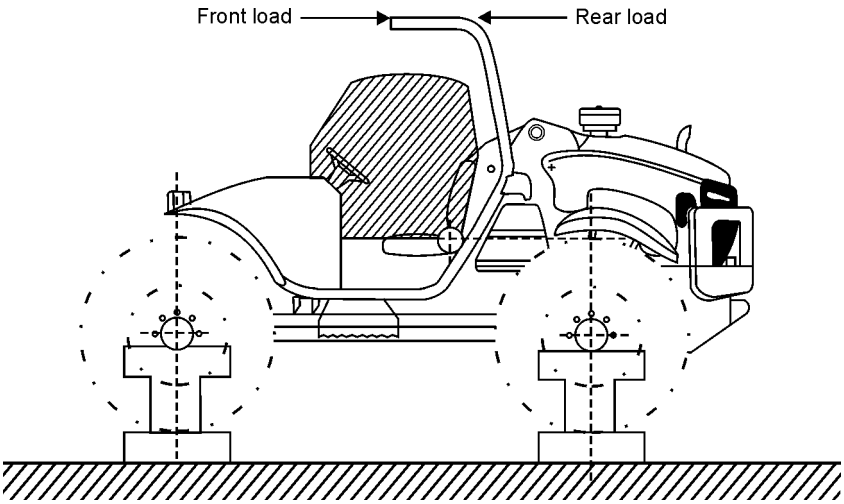

Figure 9.4

Rear roll bar frame

Front and rear load applications, protective cab and rear roll bar frame

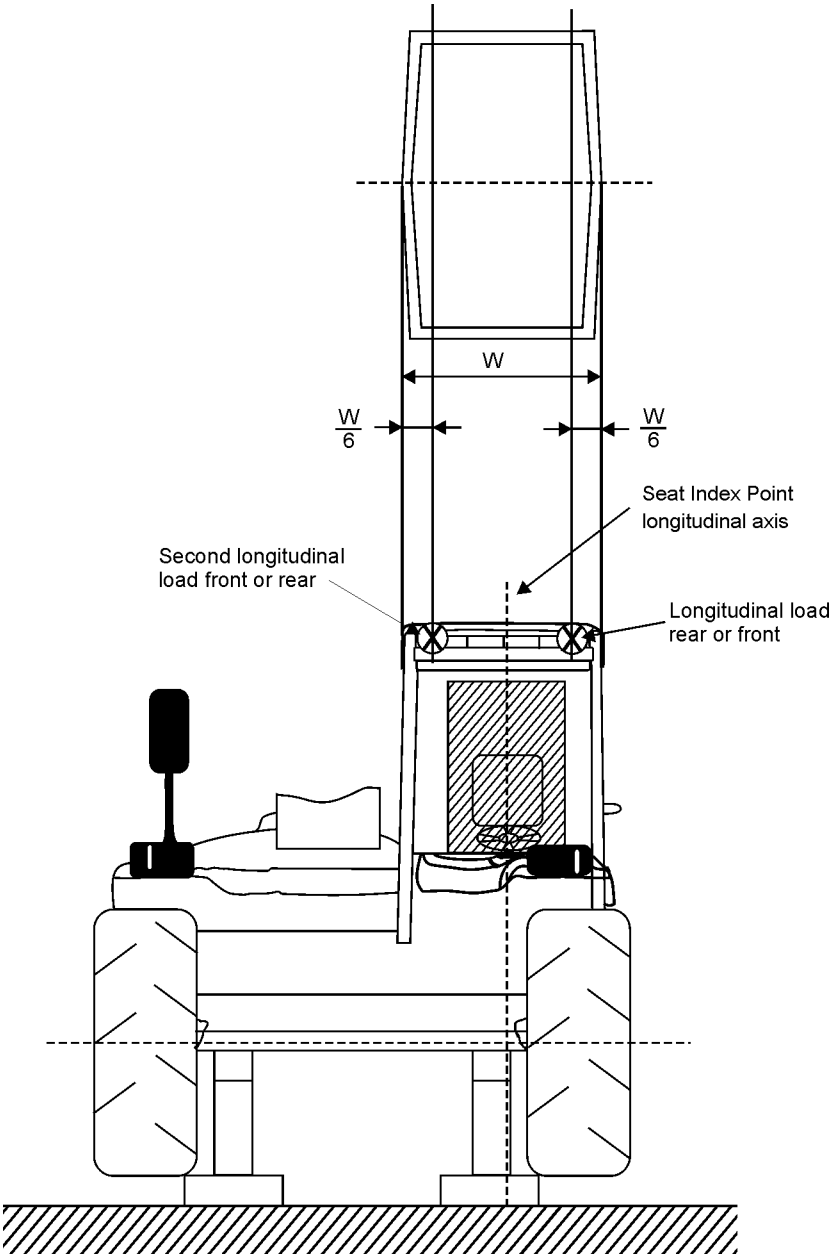

Figure 9.5

Longitudinal load applications

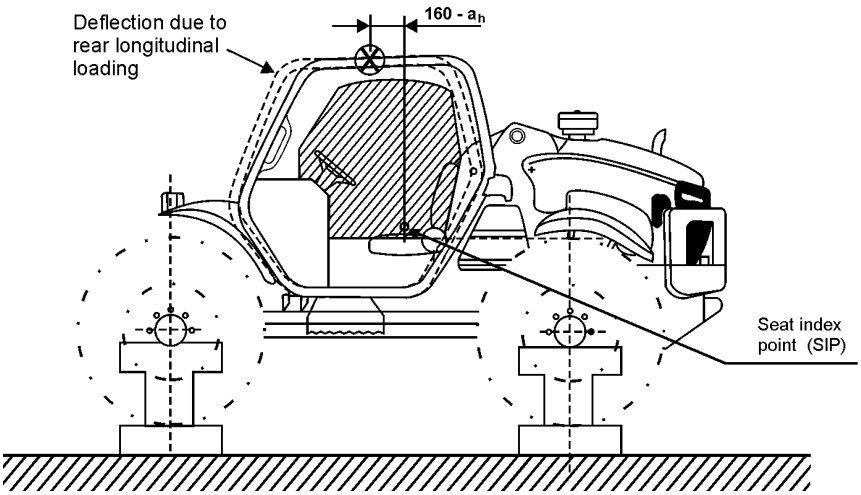

Figure 9.6

Protective cab

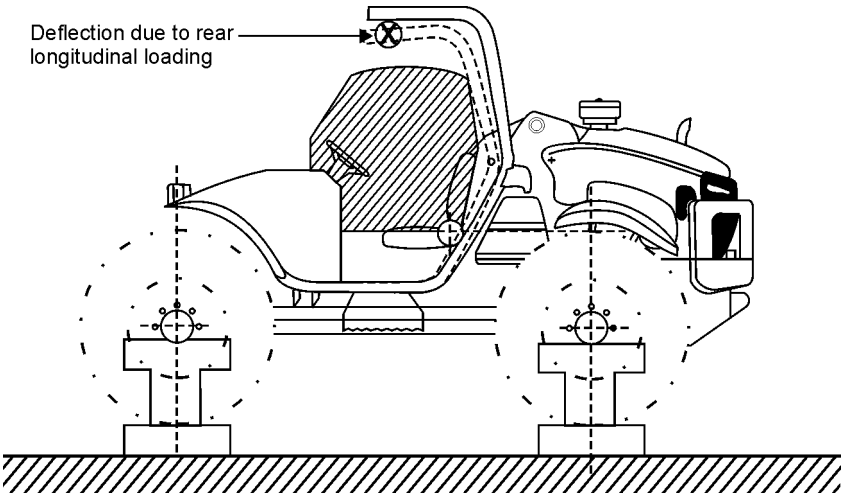

Figure 9.7

Rear roll bar frame

Side load application (side view), protective cab and rear roll bar frame

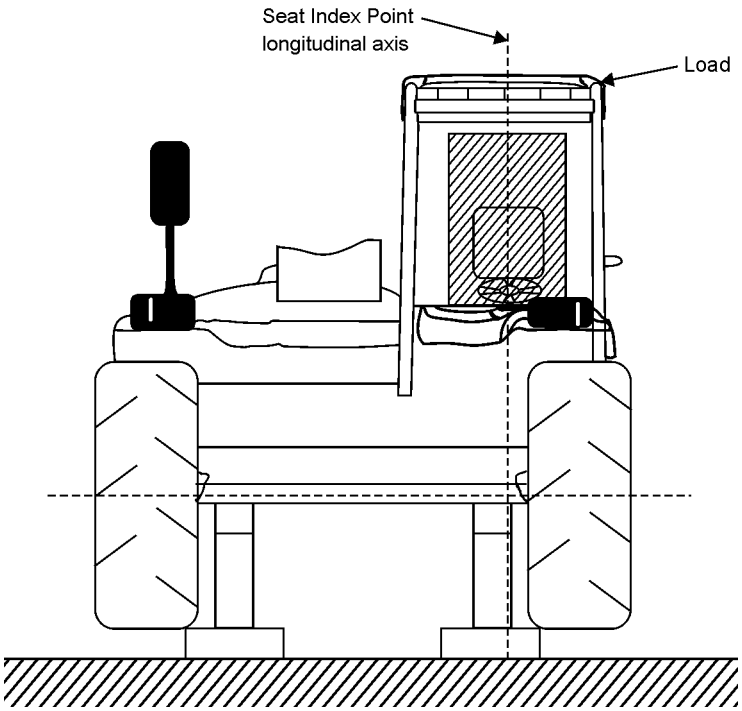

Figure 9.8

Side load application (front view)

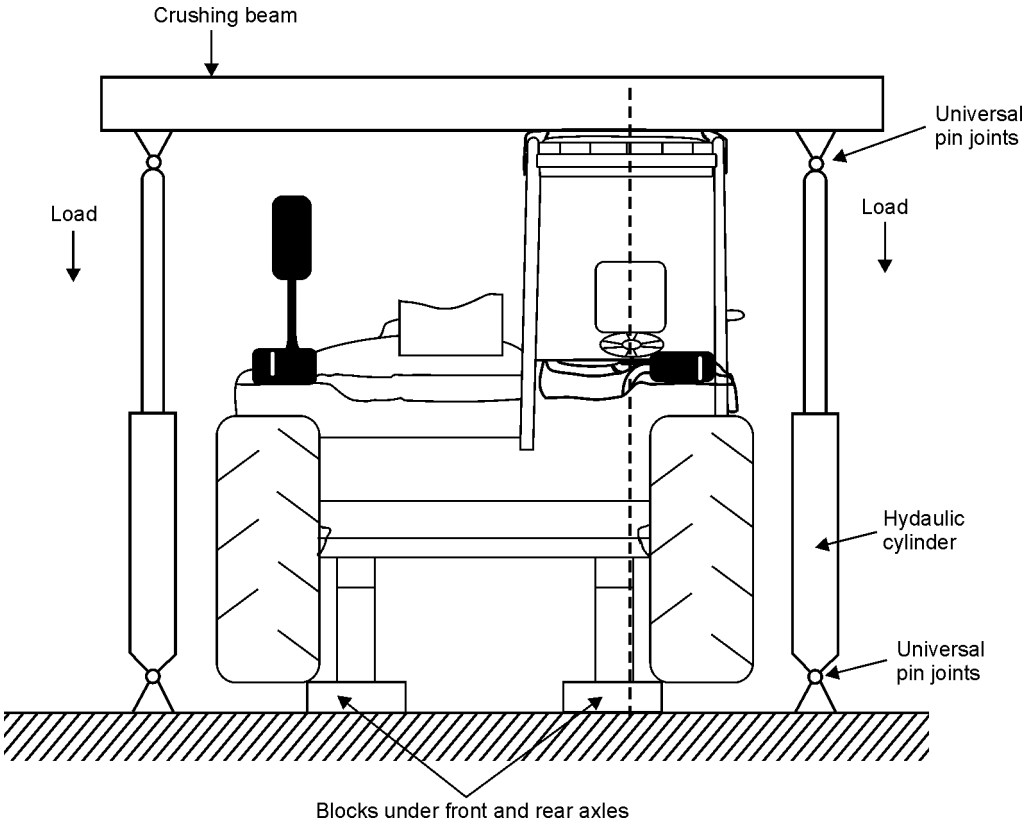

Figure 9.9

Example of an arrangement for crushing test

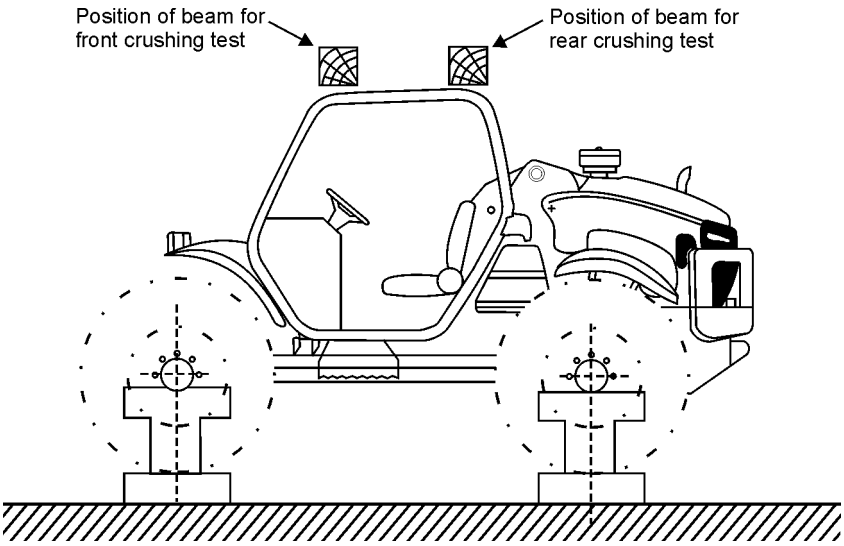

Figure 9.10

Protective cab

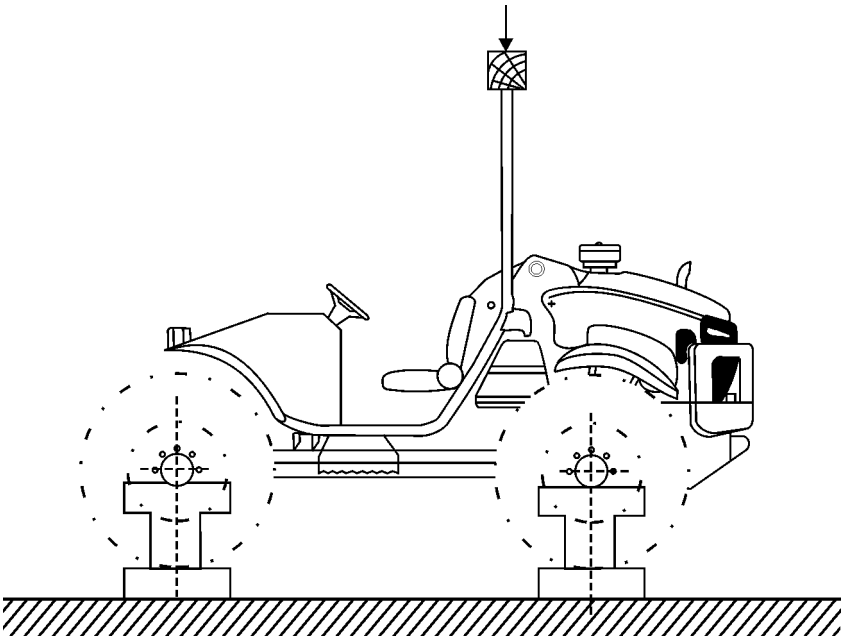

Figure 9.11

Rear roll bar frame

Position of beam for front and rear crushing tests, protective cab and rear roll bar frame

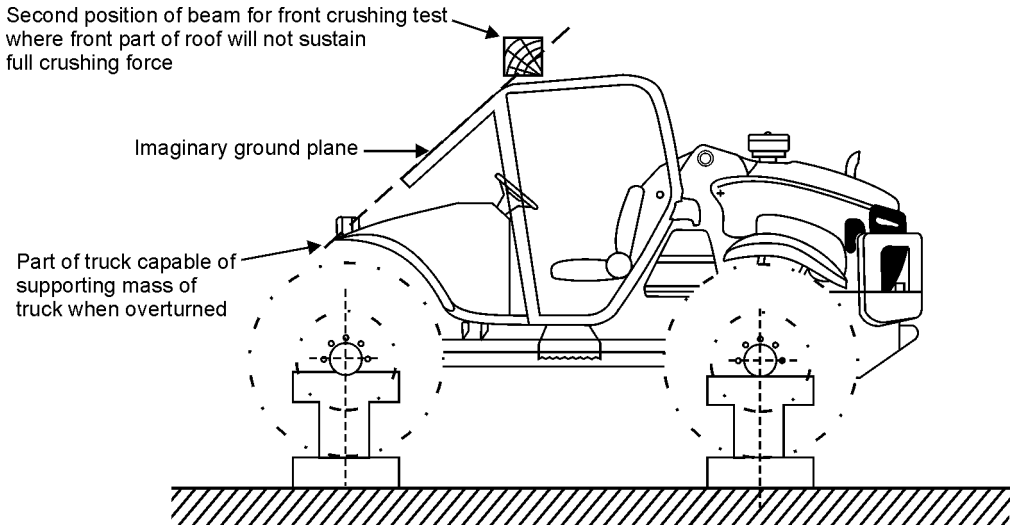

Figure 9.12

Protective cab

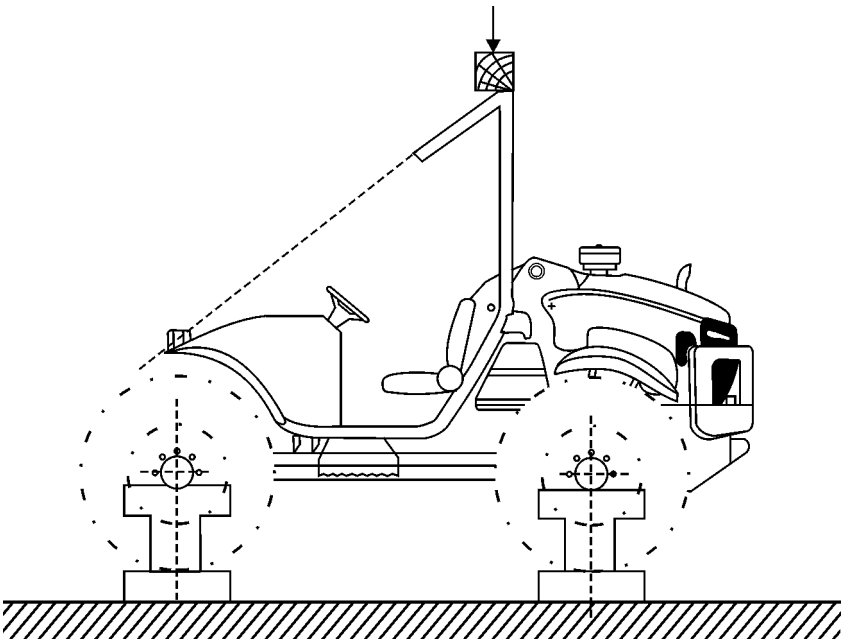

Figure 9.13

Rear roll bar frame

Position of beam for front crushing test when full crushing force not sustained in front

Dimensions	mm	Remarks
A_1 A_0	100	minimum
B_1 B_0	100	minimum
F_1 F_0	250	minimum
F_2 F_0	250	minimum
G_1 G_0	250	minimum
G_2 G_0	250	minimum
H_1 H_0	250	minimum
H_2 H_0	250	minimum
J_1 J_0	250	minimum
J_2 J_0	250	minimum
E_1 E_0	250	minimum
E_2 E_0	250	minimum
D_0 E_0	300	minimum
J_0 E_0	300	minimum
A_1 A_2	500	minimum
B_1 B_2	500	minimum
C_1 C_2	500	minimum
D_1 D_2	500	minimum
I_1 I_2	500	minimum
F_0 G_0	-	depending on the truck
I_0 G_0	-	
C_0 D_0	-	
E_0 F_0	-	

Table 9.2

Dimensions of the clearance zone

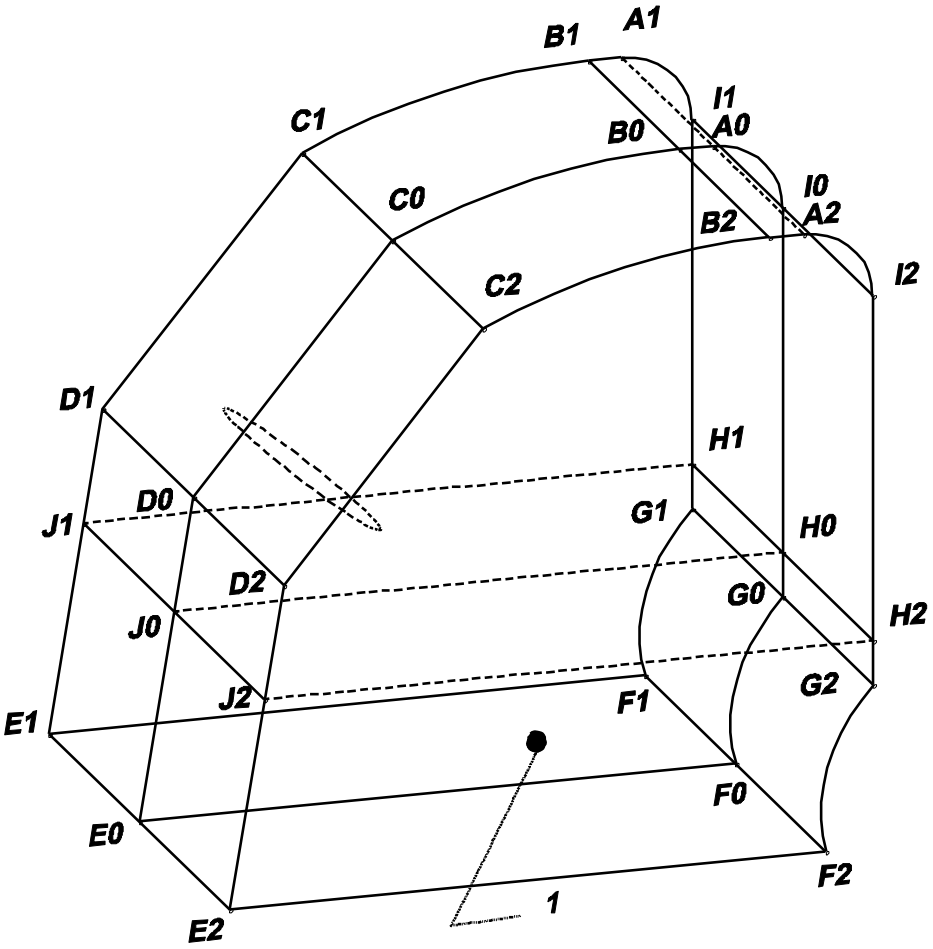

1 – Seat index point

Figure 9.14

Clearance zone

Note: for dimensions, see Table 9.2 on previous page

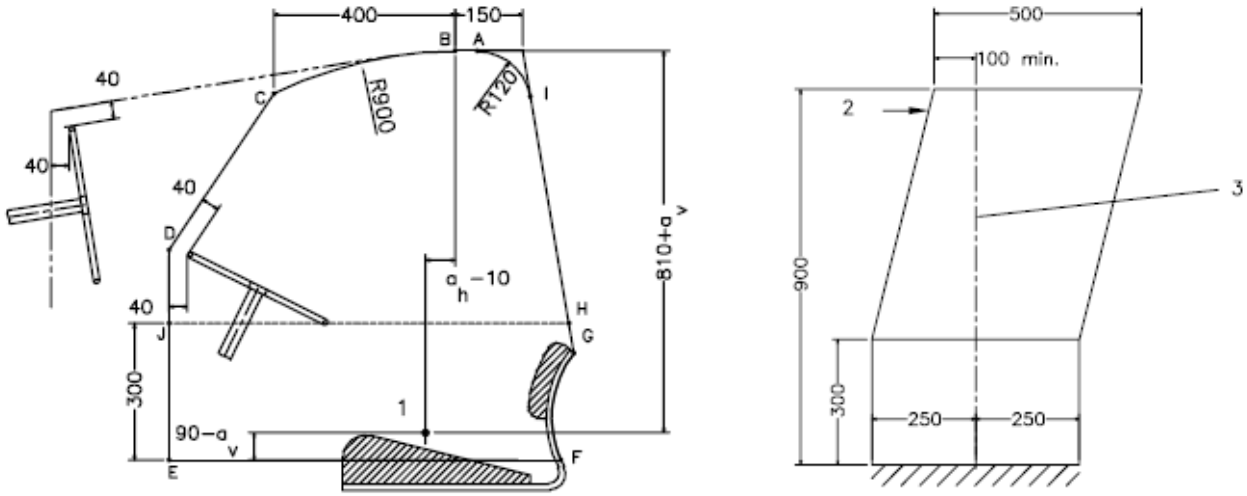

(a) side view
section in reference plan

(b) rear or front view

1 – Seat index point
2 – Force
3 – Vertical reference plane

Figure 9.15

Clearance zone

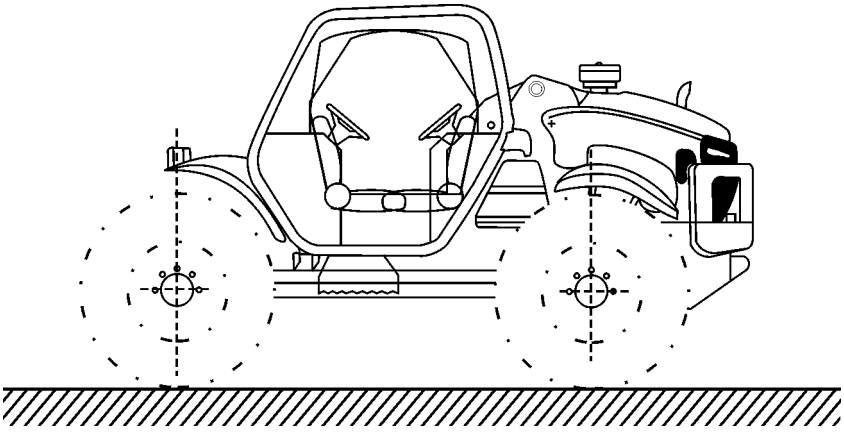

Figure 9.16

Protective cab

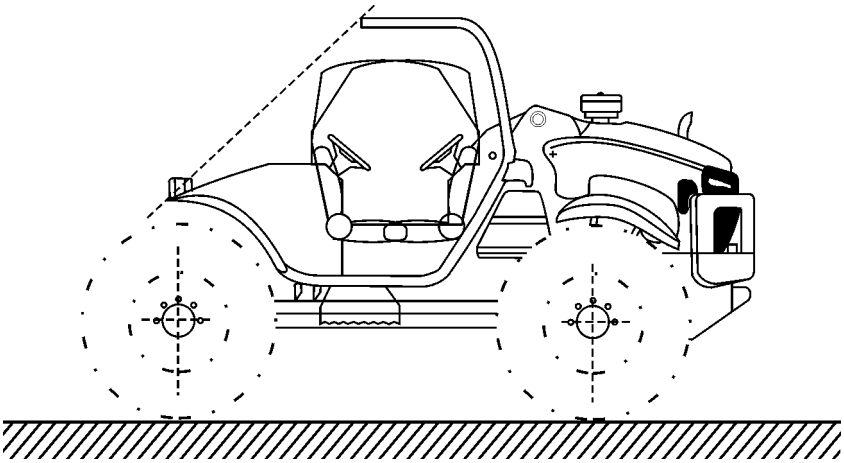

Figure 9.17

Rear roll bar frame

Clearance zone for truck with reversible seat and steering wheel, protective cab and rear roll bar frame

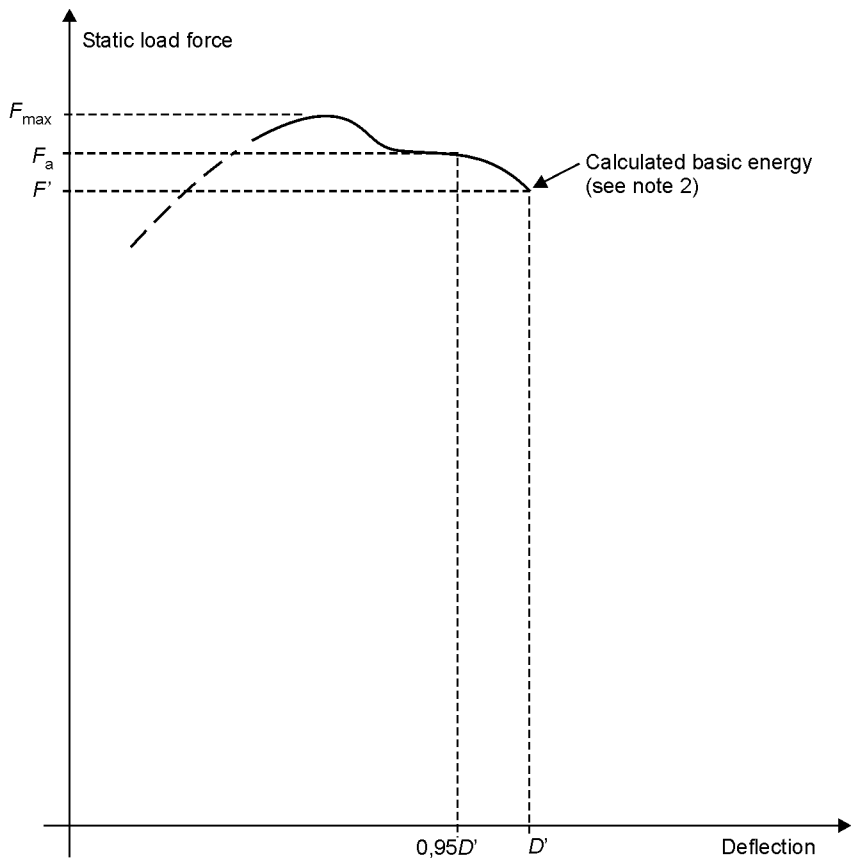

Notes:

1. Locate Fa in relation to 0.95 D'
2. Overload test not necessary as $F_a < 1.03$ F'

Figure 9.18

Force / deflection curve

Overload test not necessary

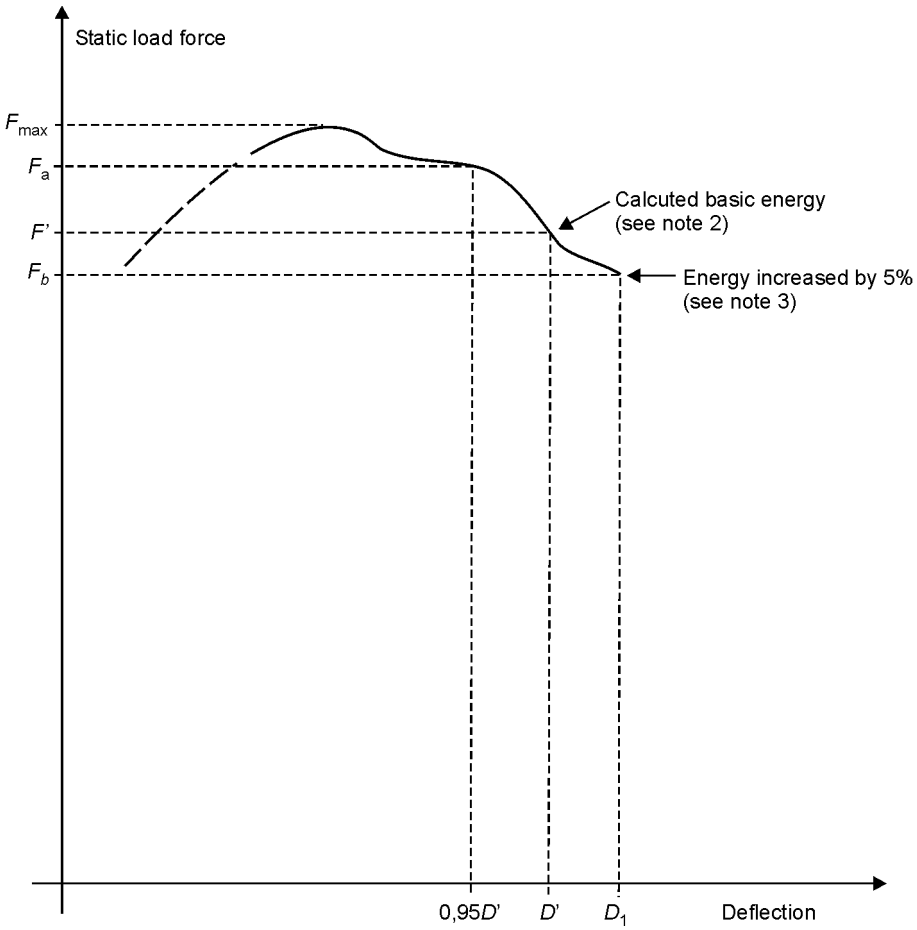

Notes:

1. Locate Fa in relation to 0.95 D'
2. Overload test necessary as $F_a > 1.03$ F'
3. Overload test performance satisfactory as Fb > 0.97F' and Fb > 0.8F max.

Figure 9.19

Force / deflection curve

Overload test necessary

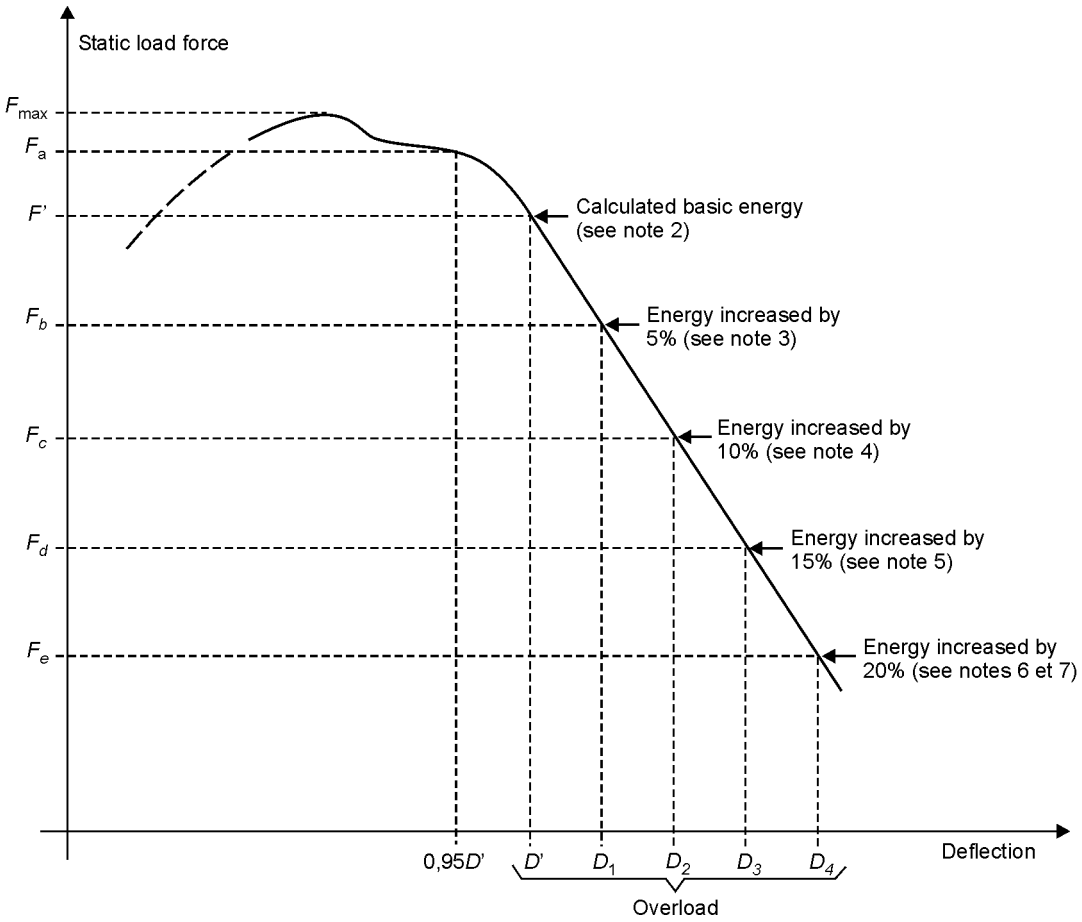

Notes:

1. Locate F_a in relation to 0.95 D'
2. Overload test necessary as $F_a > 1.03$ F'
3. $F_b < 0.97$ F' therefore further overload necessary
4. $F_c < 0.97$ Fb therefore further overload necessary
5. $F_d < 0.97$ Fc therefore further overload necessary
6. Overload test performance satisfactory, if Fe > 0.8 F_{max}
7. Failure at any stage when load drops below 0.8 F_{max}.

Figure 9.20

Force / deflection curve

Overload test to be continued

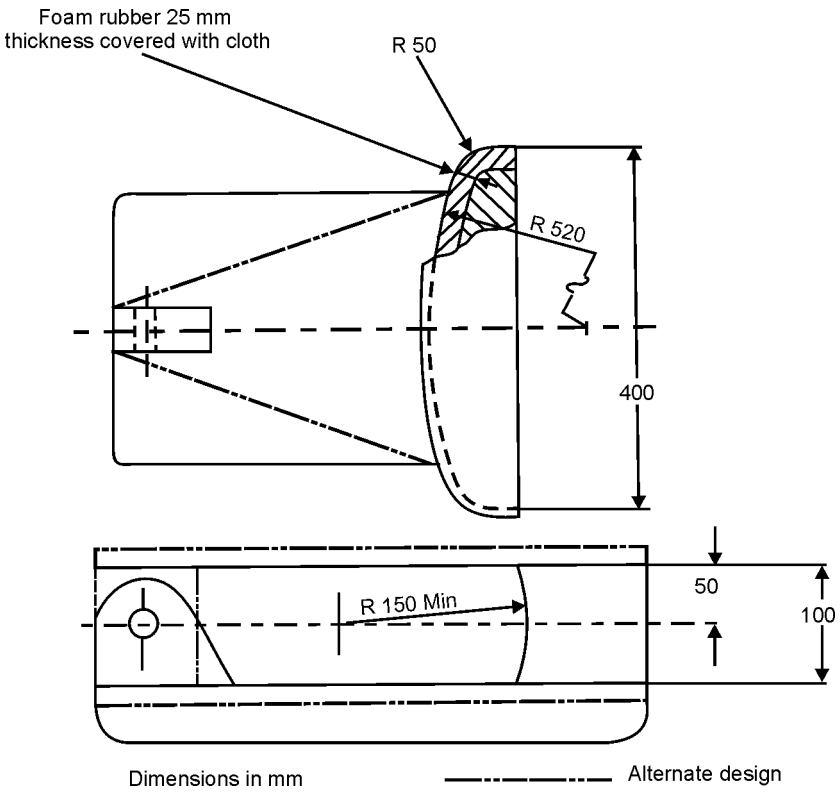

Figure 9.21

The load application device

Note: The dimensions not shown are optional to satisfy the test facility and do not influence the test results.

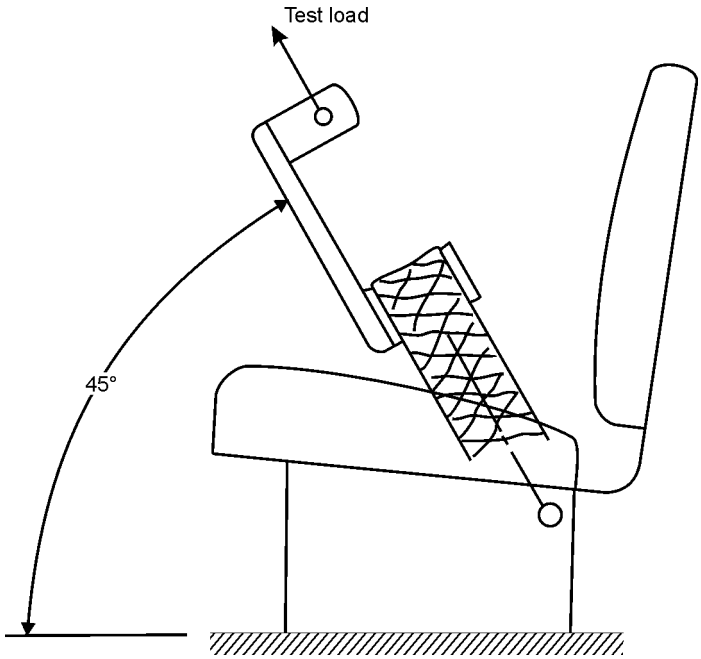

Figure 9.22

Load application in the upward and forward direction

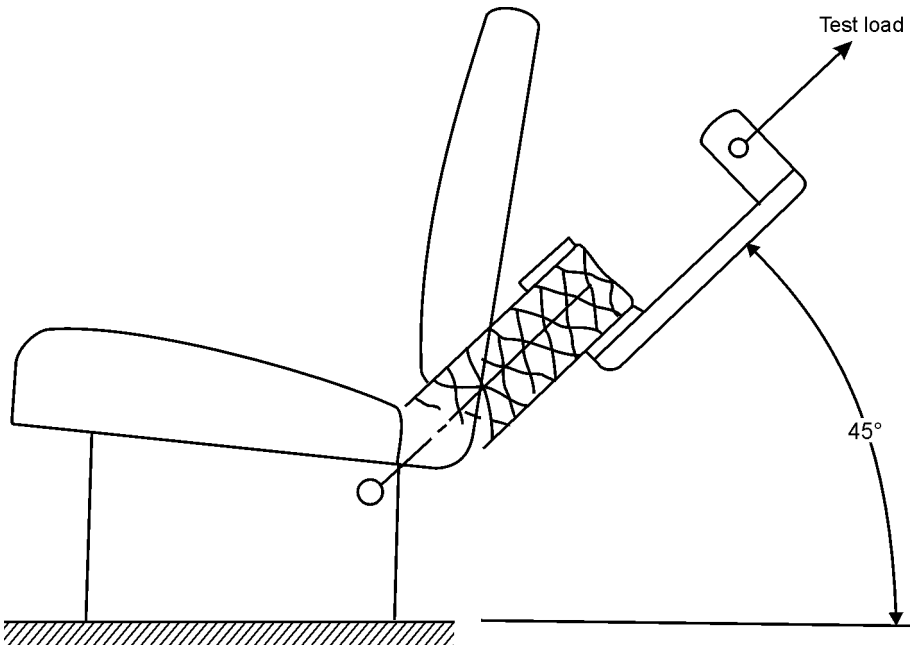

Figure 9.23

Load application in the upward and rearward direction

SPECIMEN TEST REPORT

Note: Units shown below, which appear in ISO 1000:1992; Amd1:1998, shall be stated and followed by national units in parentheses, if necessary.

- Protective structure manufacturer's name and address:
- Submitted for test by:

- Make of the protective structure:
- Model of the protective structure:
- Type of the protective structure: *Cab, Frame, Rear rollbar, Cab with integrated frame, etc*.

- Date, location of falling-object (FOPS) test and Code version:
- Date, location of roll-over (ROPS) test and Code version:

1. SPECIFICATION OF TEST TRUCK

1.1 Identification of truck to which the protective structure is fitted for the test

1.1.1 - Make of the truck: (*)
- Model (trade name):
- Type: 2 WD or 4 WD;
articulated 4 WD or articulated 4 WD with twin (dual) wheels (if applicable)

(*) possibly different from truck manufacturer's name

1.1.2 Numbers
- 1st Serial No. or prototype:
- Serial No.:

1.2 Mass of unballasted truck with protective structure fitted and without driver

Front	kg
Rear	kg
Total	kg

- Mass used for calculating impact energies and crushing forces: kg

1.3 Minimum track and tyre sizes

	Minimum track	Tyre sizes
Front	mm	
Rear	mm	

1.4 Truck seat

- Truck with a reversible driver's position (reversible seat and steering wheel): Yes / No
- Make/ type/ model of seat:
- Make/ type/ model of optional seat(s)
  and position(s) of the seat index point (SIP) (only for driver seats):

  (description of seat 1 and SIP position)

  (description of seat 2 and SIP position)

  (description of seat _ and SIP position)
- Seat belt anchorage: Type
- Seat mounting on the truck: Type
- Other seat components: Type
- Seat operating position in the test: Description

Masses used for calculating the loads

Seat	Make/Model/Type
COMPONENTS	MASS (kg)
Driver seat:	
Seat belt assembly:	
Other seat components:	
Total:	

2. SPECIFICATION OF PROTECTIVE STRUCTURE

2.1 Photographs from side and rear showing mounting details including mudguards

2.2 General arrangement drawing of the side and the rear of the structure including position of the seat index points (SIP), details of mountings and position of the front part of the truck capable of supporting the truck when overturned (if necessary). The main dimensions must figure on the drawings, including external dimensions of truck with protective structure fitted and main interior dimensions.

2.3 Brief description of the protective structure comprising:

- type of construction;
- details of mountings;
- details of cladding and padding;
- details of the front part of the truck capable of supporting the truck when overturned (if necessary);
- means of access and escape;
- additional frame: Yes / No

2.4 Tiltable or not tiltable/ Folding or not folding structure

- Tiltable / not tiltable (*)
  If it is necessary to tilt with any tools, this should be stated as follows:
  - Tiltable with tools/ tiltable without tools (*)

- Folding/ not folding (*)
  If it is necessary to fold with any tools, this should be stated as follows:
  - Folding with tools/ folding without tools (*)

(*) delete as appropriate

2.5 Dimensions

Dimensions should be measured with seat pan and backrest loaded and adjusted according to Definition 1.5 of the Code.

When the truck is fitted with different optional seats or has a reversible driver's position (reversible seat and steering wheel), the dimensions in relation to the seat index points shall be measured in each case (SIP 1, SIP 2, etc.).

2.5.1 Height of roof members above the seat index point: mm

2.5.2 Height of roof members above the truck footplate: mm

2.5.3 Interior width of the protective structure (810 + a_v) mm above the seat index point: mm

2.5.4 Interior width of the protective structure vertically above the seat index point at the level of centre of the steering wheel: mm

2.5.5 Distance from the centre of the steering wheel to the right-hand side of the protective structure: mm

2.5.6 Distance from the centre of the steering wheel to the left-hand side of the protective structure: mm

2.5.7 Minimum distance from the steering wheel rim to the protective structure: mm

2.5.8 Horizontal distance from the seat index point to the rear of the protective mm

structure at a height of (810 + a_v) mm above the seat index point:

2.5.9 Position (with reference to the rear axle) of the front part of the truck capable of supporting the truck when overturned (if necessary)

- horizontal distance: mm
- vertical distance: mm

2.6 Details of materials used in the construction of the protective structure and specifications of steels used

Steel specifications shall be in conformity with ISO 630:1995; Amd1:2003.

2.6.1 Main frame: (parts - material - sizes)

- Is steel rimmed, semi-killed or killed:
- steel standard and reference:

2.6.2 Mountings: (parts - material - sizes)

- Is steel rimmed, semi-killed or killed:
- steel standard and reference:

2.6.3 Assembly and mounting bolts: (parts - sizes)

2.6.4 Roof: (parts - material - sizes)

2.6.5 Cladding: (parts - material - sizes)

2.6.6 Glass: (type - grade - sizes)

2.6.7 Front part of the truck capable of supporting the truck when overturned (if necessary) (parts - material - sizes)

2.7. Details of truck manufacturer's reinforcements on original parts

3. TEST RESULTS

3.1 Falling-object test

3.1.1 Test conditions

3.1.1.1 Energy level used: J

3.1.1.2 Falling object used

3.1.1.2.1 Standard

- Diameter: mm
- Length: mm
- Mass: kg

3.1.1.2.2 Sphere

- Diameter: mm

– Mass: kg

3.1.1.2.3 Height of drop: mm

3.1.1.2.4 Number of drops:

3.1.1.2.5 Diagram showing location of drop(s):

3.1.2 Photographs

3.1.2.1 Photograph of the falling object and test device before falling-object test(s) have been carried out.

3.1.2.2 Photographs illustrating the upper part and the base of the protective structure after the falling-object test(s) have been carried out.

3.1.3 Results:

3.2 Static loading and crushing tests

3.2.1 Test conditions

– Impact tests were made:
  – to the rear left / right
  – to the front right / left
  – to the side right / left

– Mass used for calculating impact energies and crushing forces: kg

– Energies and forces applied:
  – rear: kJ
  – front: kJ
  – side: kJ
  – crushing force: kN

3.2.2 Permanent deflections measured after the tests

3.2.2.1 Permanent deflections of the extremities of the protective structure measured after the series of tests:

– Back (forwards / backwards):
  – left-hand: mm
  – right-hand: mm

– Front (forwards / backwards):
  – left-hand: mm
  – right-hand: mm

– Sideways (to the left / to the right):
  – front: mm
  – rear: mm

– Top (downwards / upwards):
  – rear: left-hand: mm

– right-hand: mm
– front: left-hand: mm
– right-hand: mm

3.2.2.2 Difference between total instantaneous deflection and residual deflection during sideways impact test (elastic deflection): mm

3.2.2.3 Results:

3.2.3 Curves

A copy of the force/deflection curves derived during the tests shall be included.

If a horizontal overload test was required, the reason for the overload shall be described and the copy of additional force/deflection curves obtained during overload shall be included.

Statement:

The acceptance conditions of these tests relative to the protection of the Deflection-Limiting Volume and of the clearance zone are fulfilled for the falling-object test and the roll-over test. The structure is a protective structure in accordance with the Code.

3.3 Cold weather performance (resistance to brittle fracture)

Method used to identify resistance to brittle fracture at reduced temperature:

.

.

.

Steel specifications shall be in conformity with ISO 630:1995; Amd1:2003.

Steel specification: (reference and relevant standard)

3.4 Seatbelt anchorage performance

3.4.1 Loading in the forward and upward direction

Driver seat	Make/Model/Type	
GRAVITY FORCE (Fg = seat mass x 9.81) N	REQUIRED FORCE (4450 + 4Fg) N	APPLIED FORCE N

3.4.2. Loading in the rearward and upward direction

Driver seat	Make/Model/Type	
GRAVITY FORCE	REQUIRED FORCE	APPLIED FORCE

(Fg = seat mass x 9.81) N	(2225 + 2Fg) N	N

3.4.3 Curves, drawings and photos

A copy of the force/deflection curves derived during the tests shall be included.

Drawings and/or photos of the seat mounting and anchorages have to be added.

Statement (if necessary):

The testing station certifies that the tested seat is the worst variant among the seats listed below that are identical regarding the seatbelt anchorage performance test.

Statement:

During the test, no structural failure or release of seat, seat adjuster mechanism or other locking service occurred. The seat and safety belt anchorage tested fulfil the requirement of the OECD procedure.

3.5 Truck(s) to which the protective structure is fitted

OECD Approval Number:										
Make	Model	Type	Other specifi-cations	Mass			Tiltable	Wheel base	Minimum track	
				Front	Rear	Total			Front	Rear
		2/4 WD, etc	*where applicable*	kg	kg	kg	Yes/ No	mm	mm	

SPECIMEN TECHNICAL EXTENSION REPORT

Note: Units shown below, which appear in ISO 1000:1992; Amd1:1998, shall be stated and followed by national units in parentheses, if necessary.

- Protective structure manufacturer's name and address:
- Submission for extension by:

- Make of the protective structure:
- Model of the protective structure:
- Type of the protective structure: *Cab, Frame, Rear rollbar, Cab with integrated frame, etc*.

- Date, location of extension and Code version:

- Reference of the original test:
- Approval number and date of the original test report:

- Statement giving the reasons of the extension and explaining the procedure chosen (e.g. extension with validation test):

Depending on the case some of the following paragraphs may be omitted if their content is identical to the one of the original test report. It is only necessary to highlight the differences between the truck and protective structure described in the original test report and the one for which the extension has been required.

1. SPECIFICATION OF TEST TRUCK

1.1 Identification of truck to which the protective structure is fitted for the test

1.1.1 - Make of the truck: (*)
- Model (trade name):
- Type: 2 WD or 4 WD;
articulated 4 WD or articulated 4 WD with twin (dual) wheels (if applicable)

(*) possibly different from truck manufacturer's name

1.1.2 Numbers
- 1st Serial No. or prototype:
- Serial No.:

1.2 Mass of unballasted truck with protective structure fitted and without driver

Front	kg
Rear	kg
Total	kg

- Mass used for calculating impact energies and crushing forces: kg

1.3 Minimum track and tyre sizes

	Minimum track	Tyre sizes
Front	mm	
Rear	mm	

1.4 Truck seat

- Truck with a reversible driver's position (reversible seat and steering wheel): Yes / No
- Make/ type/ model of seat:
- Make/ type/ model of optional seat(s)
  and position(s) of the seat index point (SIP) (only for driver seats):

  (description of seat 1 and SIP position)

  (description of seat 2 and SIP position)

  (description of seat _ and SIP position)

- Seat belt anchorage: Type
- Seat mounting on the truck: Type
- Other seat components: Type
- Seat operating position in the test: Description

Masses used for calculating the loads

Seat	Make/Model/Type
COMPONENTS	MASS (kg)
Driver seat:	
Seat belt assembly:	
Other seat components:	
Total:	

2. SPECIFICATION OF PROTECTIVE STRUCTURE

2.1 Photographs from side and rear showing mounting details including mudguards

2.2 General arrangement drawing of the side and the rear of the structure including position of the seat index points (SIP), details of mountings and position of the front part of the truck capable of supporting the truck when overturned (if necessary). The main dimensions must figure on the drawings, including external dimensions of truck with protective structure fitted and main interior dimensions.

2.3 Brief description of the protective structure comprising:

- type of construction;
- details of mountings;
- details of cladding and padding;
- details of the front part of the truck capable of supporting the truck when overturned (if necessary);
- means of access and escape;
- additional frame: Yes / No

2.4 Tiltable or not tiltable/ Folding or not folding structure

- Tiltable / not tiltable (*)
  If it is necessary to tilt with any tools, this should be stated as follows:
  - Tiltable with tools/ tiltable without tools (*)

- Folding/ not folding (*)
  If it is necessary to fold with any tools, this should be stated as follows:
  - Folding with tools/ folding without tools (*)

(*) delete as appropriate

2.5 Dimensions

Dimensions should be measured with seat pan and backrest loaded and adjusted according to Definition 1.5 of the Code.

When the truck is fitted with different optional seats or has a reversible driver's position (reversible seat and steering wheel), the dimensions in relation to the seat index points shall be measured in each case (SIP 1, SIP 2, etc.).

2.5.1 Height of roof members above the seat index point: mm

2.5.2 Height of roof members above the truck footplate: mm

2.5.3 Interior width of the protective structure (810 + a_v) mm above the seat index point: mm

2.5.4 Interior width of the protective structure vertically above the seat index point at the level of centre of the steering wheel: mm

2.5.5 Distance from the centre of the steering wheel to the right-hand side of the protective structure: mm

2.5.6 Distance from the centre of the steering wheel to the left-hand side of the protective structure: mm

2.5.7 Minimum distance from the steering wheel rim to the protective structure: mm

2.5.8 Horizontal distance from the seat index point to the rear of the protective structure at a height of (810 + a_v) mm above the seat index point: mm

2.5.9 Position (with reference to the rear axle) of the front part of the truck capable of supporting the truck when overturned (if necessary)

- horizontal distance: mm
- vertical distance: mm

2.6 Details of materials used in the construction of the protective structure and specifications of steels used

Steel specifications shall be in conformity with ISO 630:1995; Amd1:2003.

2.6.1 Main frame: (parts - material - sizes)

- Is steel rimmed, semi-killed or killed:
- steel standard and reference:

2.6.2 Mountings: (parts - material - sizes)

- Is steel rimmed, semi-killed or killed:
- steel standard and reference:

2.6.3 Assembly and mounting bolts: (parts - sizes)

2.6.4 Roof: (parts - material - sizes)

2.6.5 Cladding: (parts - material - sizes)

2.6.6 Glass: (type - grade - sizes)

2.6.7 Front part of the truck capable of supporting the truck when overturned (if necessary) (parts - material - sizes)

2.7. Details of truck manufacturer's reinforcements on original parts

3. TEST RESULTS (in case of a validation test)

3.1 Falling-object test NA

3.2 Static loading and crushing tests

3.2.1 Test conditions

- Impact tests were made:
  - to the rear left / right

- to the front right / left
- to the side right / left

- Mass used for calculating impact energies and crushing forces: kg

- Energies and forces applied:
  - rear: kJ
  - front: kJ
  - side: kJ
  - crushing force: kN

3.2.2 Permanent deflections measured after the tests

3.2.2.1 Permanent deflections of the extremities of the protective structure measured after the series of tests:

- Back (forwards / backwards):
  - left-hand: mm
  - right-hand: mm
- Front (forwards / backwards):
  - left-hand: mm
  - right-hand: mm
- Sideways (to the left / to the right):
  - front: mm
  - rear: mm
- Top (downwards / upwards):
  - rear: left-hand: mm
  - right-hand: mm
  - front: left-hand: mm
  - right-hand: mm

3.2.2.2 Difference between total instantaneous deflection and residual deflection during sideways impact test (elastic deflection): mm

Statement:

The difference between the original tested models and the models for which the extension has been required are:

- …

- ….

The results of the validation test fulfil the ±7% conditions (if relevant).

The test station has checked the modifications and certifies that the effect of these modifications do not to affect the results on the strength of the protective structure.

The acceptance conditions relative to the protection of the clearance zone are fulfilled. The structure is a roll-over protective structure in accordance with the Code.

3.2.3 Curves

A copy of the force/deflection curves derived during the tests shall be included (in the case of a validation test).

	Deflection measured when required energy level has been reached			Force measured when required energy level has been reached		
	original test mm	validation test mm	relative deviation %	original test kN	validation test kN	relative deviation %
First longitudinal loading test						
Lateral loading test						
Second longitudinal test						

If a horizontal overload test was required, the reason for the overload shall be described and the copy of additional force/deflection curves obtained during overload shall be included.

3.3 Cold weather performance (resistance to brittle fracture)

Method used to identify resistance to brittle fracture at reduced temperature:

.

.

.

Steel specifications shall be in conformity with ISO 630:1995; Amd1:2003.

Steel specification: (reference and relevant standard)

3.4 Seatbelt anchorage performance

3.4.1 Loading in the forward and upward direction

Driver seat	Make/Model/Type	
GRAVITY FORCE (Fg = seat mass x 9.81) N	REQUIRED FORCE (4450 + 4Fg) N	APPLIED FORCE N

3.4.2. Loading in the rearward and upward direction

Driver seat	Make/Model/Type	
GRAVITY FORCE (Fg = seat mass x 9.81) N	REQUIRED FORCE (2225 + 2Fg) N	APPLIED FORCE N

3.4.3 Curves, drawings and photos

A copy of the force/deflection curves derived during the tests shall be included.

Drawings and/or photos of the seat mounting and anchorages have to be added.

Statement:

During the test, no structural failure or release of seat, seat adjuster mechanism or other locking service occurred. The seat and safety belt anchorage tested fulfil the requirement of the OECD procedure.

3.5 Truck(s) to which the protective structure is fitted

OECD Approval Number:										
Make	Model	Type	Other specifi-cations	Mass			Tiltable	Wheel-Base	Minimum track	
				Front	Rear	Total			Front	Rear
		2/4 WD, etc	*where applicable*	kg	kg	kg	*Yes/No*	mm	mm	

SPECIMEN ADMINISTRATIVE EXTENSION REPORT

Note: Units shown below, which appear in ISO 1000:1992; Amd1:1998, shall be stated and followed by national units in parentheses, if necessary.

- Submitted for extension by:
- Date, location of extension and Code version:

- Reference of the original test:
- Approval number and date of the original test:

- Statement giving the reasons of the extension and explaining the procedure chosen.

1. Specification of the protective structure

- Frame or Cab:
- Manufacturer:
- Make:
- Model:
- Type:
- Serial Number from which modification applies:

2. Denomination of truck(s) to which the protective structure is fitted

OECD Approval Number:										
Make	Model	Type	Other specifi-cations	Mass			Tiltable	Wheel-Base	Minimum track	
				Front	Rear	Total			Front	Rear
		2/4 WD, etc	*where applicable*	kg	kg	kg	*Yes/No*	mm	mm	

3. Details of modifications

Since the original test report the following modifications have been made:

_____

_____

_____

4. Statement

The modifications do not to affect the results of the original test.

The original test report therefore applies.

ANNEX I

CLEARANCE ZONE REFERRED TO THE SEAT REFERENCE POINT

INTRODUCTION

The paragraphs considered in the Annex refer to the definition of the seat reference point (SRP) and the clearance zone of ROPS based on the SRP as the reference point. The numbering of the paragraphs is the same of the corresponding paragraphs in the main Code.

In the case of extension reports to test reports that originally used SRP, required measurements shall be made with reference to SRP instead of SIP. Moreover, the use of SRP shall be clearly indicated. For drafting such extension reports, the paragraphs detailed in the Annex should be followed. For the paragraphs non-reported in the Annex, previous version of Code 9 should be considered.

1. DEFINITIONS

1.5 Determination of seat reference point; seat location and adjustment for test

1.5.1 Seat reference point

1.5.1.1 The reference must be established by means of the apparatus illustrated in Figure 9.24. The apparatus consists of a seat pan board and backrest boards. The lower backrest board is jointed in the region of the ischium humps (**A**) and loin (**B**), the joint (**B**) being adjustable in height.

1.5.1.2 The seat reference point is defined as the point in the median longitudinal plane of the seat where the tangential plane of the lower backrest and a horizontal plane intersect. This horizontal plane cuts the lower surface of the seat pan board 150 mm in front of the above-mentioned tangent.

1.5.1.3 The apparatus is positioned on the seat. It is then loaded with a force of 550 N at a point 50 mm in front of joint (**A**), and the two parts of the backrest board lightly pressed tangentially against the backrest.

1.5.1.4 If it is not possible to determine definite tangents to each area of the backrest (above and below the lumbar region), the following steps must be taken:

- where a definite tangent to the lower area is not possible, the lower part of the backrest board is pressed against the backrest vertically;

- where a definite tangent to the upper area is not possible, the point (B) is fixed at a height of 230 mm above the lower surface of the seat pan board, the backrest board being perpendicular to the seat pan board. Then the two parts of the backrest board are lightly pressed against the backrest tangentially.

1.5.2 Seat position and adjustment to determine the seat reference point

1.5.2.1 Where the seat position is adjustable, the seat must be adjusted to its rear uppermost position;

1.5.2.2 where the inclination of the backrest and seat pan is adjustable, these must be adjusted so that the reference point is in its rear uppermost position;

1.5.2.3 where the seat is equipped with suspension, the latter must be blocked at mid-travel, unless this is contrary to the instructions clearly laid down by the seat manufacturer.

1.5.2.4 where the position of the seat is adjustable only lengthwise and vertically, the longitudinal axis passing through the seat reference point shall be parallel with the vertical longitudinal plane of the truck passing through the centre of the steering wheel and not more than 100 mm from that plane.

1.6 Clearance zone

1.6.1 Vertical reference plane

The clearance zone (Figures 9.25 to 9.27 and Table 9.2) is defined in relation to the vertical reference plane. The vertical reference plane, generally longitudinal to the truck and passing through the seat reference point and the centre of the steering wheel shall be assumed to move horizontally with the seat and steering wheel during loading but to remain perpendicular to the truck or the floor of the protective structure.

1.6.2 Determination of clearance zone

The clearance zone is defined as follows with the truck standing on a horizontal surface and, where applicable, the steering wheel adjusted to the mid-position for seated driving:

1.6.2.1 A horizontal plane ($\mathbf{A_1 B_1 B_2 A_2}$) 900 mm above the seat reference point;

1.6.2.2 An inclined plane ($\mathbf{G_1 G_2 I_2 I_1}$) perpendicular to the reference plane and including both a point 900 mm directly above the seat reference point and the rearmost point of the seat backrest;

1.6.2.3 A cylindrical surface ($\mathbf{A_1 A_2 I_2 I_1}$) perpendicular to the reference plane, with a radius of 120 mm, tangential to the planes defined in 1.6.2.1 and 1.6.2.2 above;

1.6.2.4 A cylindrical surface ($\mathbf{B_1 C_1 C_2 B_2}$) perpendicular to the reference plane, having a radius of 900 mm extending forward for 400 mm and tangential to the plane defined in 1.6.2.1 above at a point 150 mm forward of the seat reference point;

1.6.2.5 An inclined plane ($\mathbf{C_1 D_1 D_2 C_2}$) perpendicular to the reference plane, joining the surface defined in 1.6.2.4 above at its forward edge and passing 40 mm from the forward external edge of the steering wheel. In case of a high steering wheel position, this plane extends forward from $\mathbf{B_1 B_2}$ tangentially to the surface under 1.6.2.4;

1.6.2.6 A vertical plane ($\mathbf{D_1 E_1 E_2 D_2}$) perpendicular to the reference plane 40 mm forward of the external edge of the steering wheel (see 1.6.2.5 for the case of a high steering wheel position);

1.6.2.7 A horizontal plane ($\mathbf{E_1 F_1 F_2 E_2}$) through the seat reference point;

1.6.2.8 A surface ($\mathbf{G_1 F_1 G_2 F_2}$), if necessary curved, from the bottom limit of the plane defined in 1.6.2.2 above, to the horizontal plane defined in 1.6.2.7, perpendicular to the reference plane, and in contact with the seat backrest throughout its length;

1.6.2.9 Vertical planes ($\mathbf{J_1 E_1 F_1 G_1 H_1}$) and ($\mathbf{J_2 E_2 F_2 G_2 H_2}$). These vertical planes shall extend upwards from the seat reference point for 300 mm; the distances $\mathbf{E_1 E_0}$ and $\mathbf{E_2 E_0}$ shall be 250 mm;

1.6.2.10 Parallel planes ($\mathbf{A_1 B_1 C_1 D_1 J_1 H_1 I_1}$) and ($\mathbf{A_2 B_2 C_2 D_2 J_2 H_2 I_2}$) inclined so that the upper edge of the plane on the side on which the force is applied is at least 100 mm from the vertical reference plane.

1.6.3 Trucks with a reversible driver's position

For trucks with a reversible driver's position (reversible seat and steering wheel), the clearance zone is the envelope of the two clearance zones defined by the two different positions of the steering wheel and the seat.

1.6.4 Optional seats

1.6.4.1 In the case of trucks that could be fitted with optional seats, the envelope comprising the seat reference points of all the options offered shall be used during the tests. The protective structure shall not enter the larger clearance zone which takes account of these different seat reference points.

1.6.4.2 In the case where a new seat option is offered after the test has been performed, a determination shall be made to see whether the clearance zone around the new SRP falls within the envelope previously established. If it does not, a new test must be performed.

Dimensions in mm

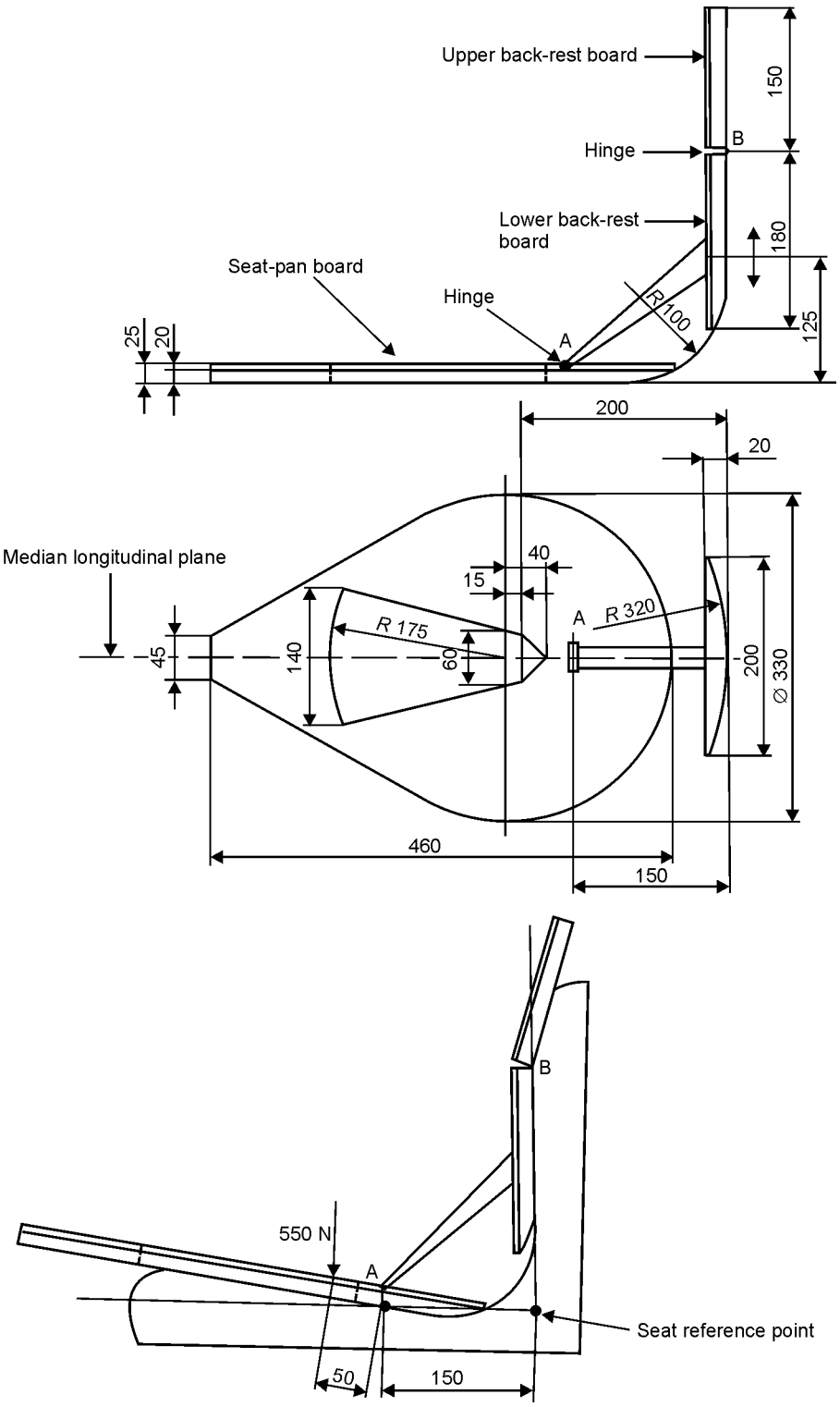

Figure 9.24

Apparatus for determination of seat reference point

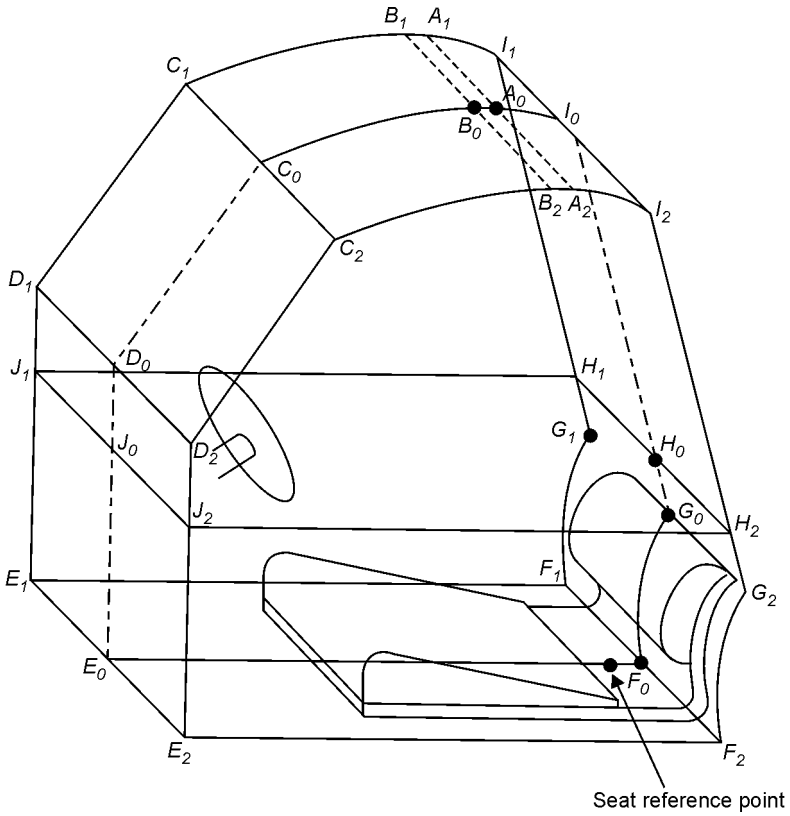

Figure 9.25

Clearance zone

Note: for dimensions, see Table 9.2

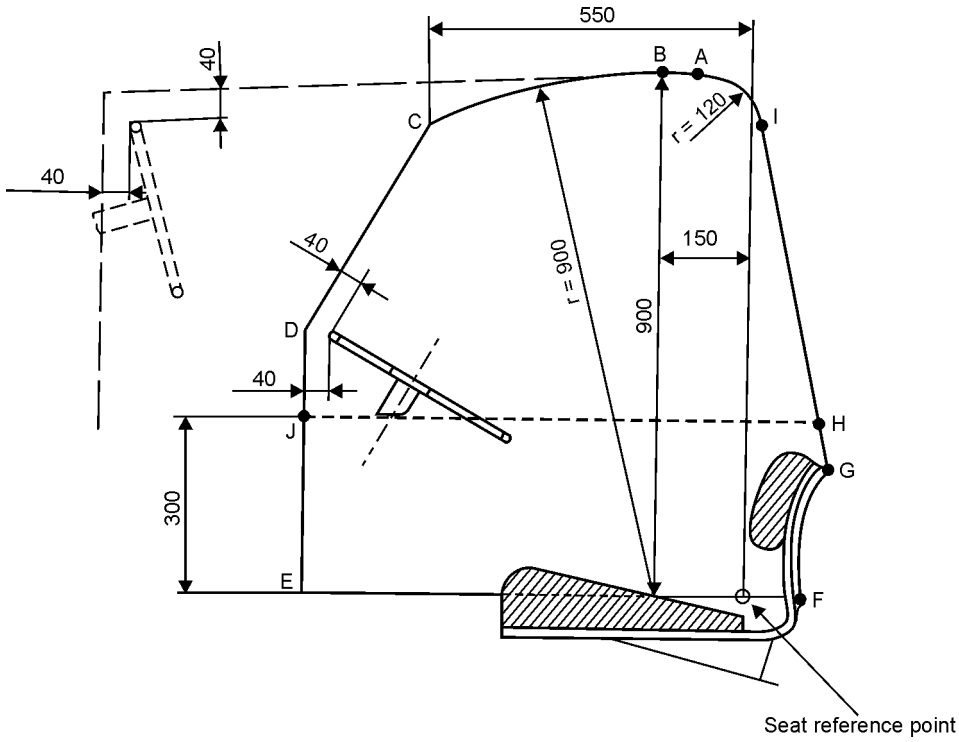

Figure 9.26

Clearance zone side view

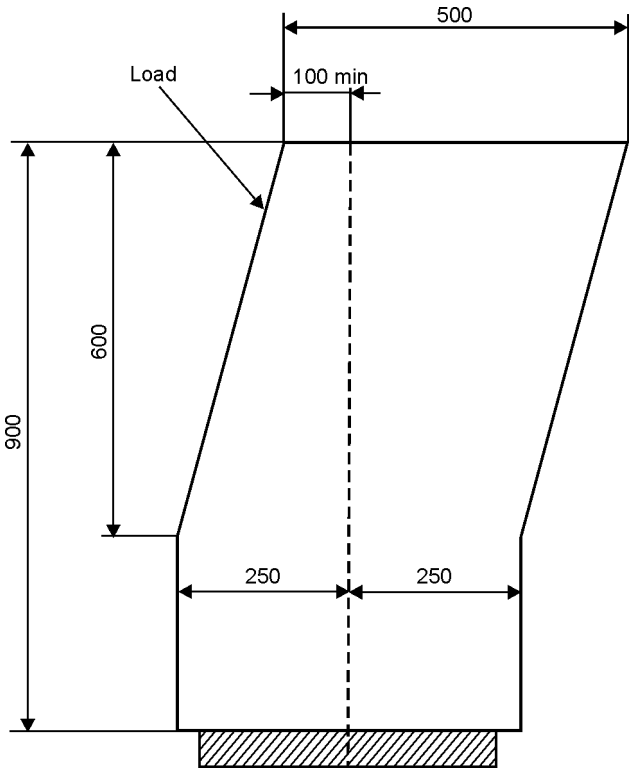

Figure 9.27

Clearance zone rear / front view 150 mm from the seat reference point